WITTENSTEIN | alpha

alpha Linear Systems
Product catalog

Dynamic
Precise
Individual



© 2024 by WITTENSTEIN alpha GmbH

All technical specifications were correct at the time of going to print. We are continually developing our products and therefore reserve the right to make modifications. This documentation is subject to occasional errors. Please appreciate that legal claims cannot be asserted as a result of incorrect specifications, illustrations or descriptions. The text, photos, technical drawings and any other illustrations printed in this publication are protected property of WITTENSTEIN alpha GmbH.

Further use of this material in printed or electronic format requires express approval from WITTENSTEIN alpha GmbH.

Any form of duplication, translation, editing, transfer to microfilm or storage on electronic systems is not permitted without express permission from WITTENSTEIN alpha GmbH.

Foreword by company management 6

WITTENSTEIN alpha 8

More than 40 years of innovation 8

alpha Linear Systems 12

Engineering Tools 26

Services 28

Digital product feature - cynapse® 30

Value Linear Systems 32

Advanced Linear Systems 48

Premium Linear Systems 80

Rotary Solutions with straight toothing 108

System Accessories 118

Lubrication system 118
- Lubricating pinion 120
- Lubricator LUC+125 122
- Lubricator LUC+400 124
- Lubrication system accessories 126
- Distribution systems 127
- Lubrication pinions and mounting axis 129

Assembly accessories 132
- Standard rack installation 133
- INIRA® rack assembly 134

Information 136

Glossary 136
Compendium 144
Gearbox / servo actuator overview 152
Rack 160
WITTENSTEIN Group 164



Dear Business Associates,

Even though we are extremely passionate about technology and innovation, the success of our customers is our top priority. We have designed our products and services to help you achieve a competitive advantage – through consistently high quality, permanent availability and the best service worldwide.

Our linear systems always focus on maximized efficiency for the customer. We are consistently rethinking our proven solutions. One example is INIRA® pinning, which has set completely new standards in pinning and revolutionized rack installation. Unique software tools such as cymex® create the perfect foundation for designing both linear systems and individual products. Our extensive know-how makes us a partner you can always rely on.

You are sure to find the right solution quickly and easily from our product range. We offer complete mechanical and mechatronic drive solutions for all types of axis. We can also provide everything from a single source on request. Our range of products and solutions will continue to grow in the future because we never stop developing new ideas to make your work easier.

Take our word for it!

Norbert Pastoors
Managing Director WITTENSTEIN alpha GmbH

We think ahead – for solutions and services that make the difference:

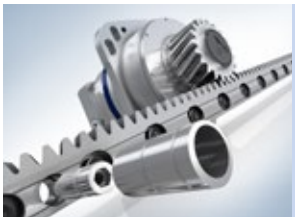

INIRA® – the revolution in rack assembly

INIRA® combines our existing innovative concepts for the simple, safe and efficient assembly of racks. Learn more on page 24.



cymex® 5 – the standard in design software

cymex® 5 allows the efficient dimensioning and layout of complete drive trains (application + linear system + motor). The individual requirements can be realized almost without limits. Learn more on page 26.

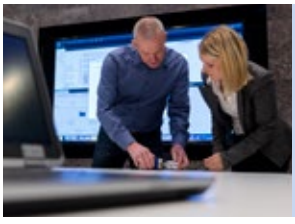

Our range of services – tailored to your specific requirements

We are also setting new standards in customer support with our sizing, commissioning, maintenance and training services from WITTENSTEIN alpha. Learn more on page 28.

YOUR WORLD IS OUR DRIVE.

FOR MORE THAN 40 YEARS.

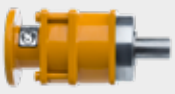

SP



LP



Linear systems



TPM⁺



High Performance Linear System



alpha Value Line

1983 | 1994 | 1996 | 1999 | 2002 | 2004 | 2006 | 2007 | 2011 | 2013 | 2015

TP



cymex®
sizing software



XP⁺ / TP⁺ / SP⁺ / LP⁺



TPK⁺ / SPK⁺ /
HG⁺ / SK⁺ / TK⁺



HDV
Hygienic Design



PERFORMANCE

Performance where it counts:
High torque, outstanding precision and high power density – essential for our products and systems.

FUTURE PROOF

We live processes:
Only those who know the exact details of customer processes and requirements are in a position to develop solutions that offer added value in the short and long term.

SCALABILITY

You never make compromises:
Whatever the performance area – we offer solutions that grow with your requirements.

WITTENSTEIN | alpha

It is good to know today what will be needed tomorrow. Applying it in practice is even better. We develop technology that shapes the future – ENGINEERING FUTURE SOLUTIONS.

EFFICIENCY

We like it „lean“:
We offer products and systems that are energy-efficient and require minimal installation space in machines.

AVAILABILITY

You need reliability:
We have the widest range of products on the market and can implement your application „just in time“.

CONNECTIVITY

We think in terms of interfaces:
All of our systems can be integrated in a wide range of peripherals.


DP⁴ for Delta robots


INIRA®


alpha Linear Systems


alpha Basic Line


cynapse®


cymex® select

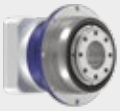
NTP

2016 | 2017 | 2018 | 2019 | 2022 | 2023

cymex® 5

SIZING ASSISTANT


V-Drive Family


premo®

CAD POINT

WITTENSTEIN Service Portal


axenia value

WITTENSTEIN alpha on all axes

Complete drive solutions under one roof

We offer the best solutions for almost every application. In addition to gearboxes, our product portfolio includes a wide range of drive solutions with linear systems and servo actuators. Adapted accessories such as couplings and shrink disks round off the product portfolio.

The diagrams below provide a quick overview of our product portfolio for a wide variety of requirements and applications:

Planetary gearboxes

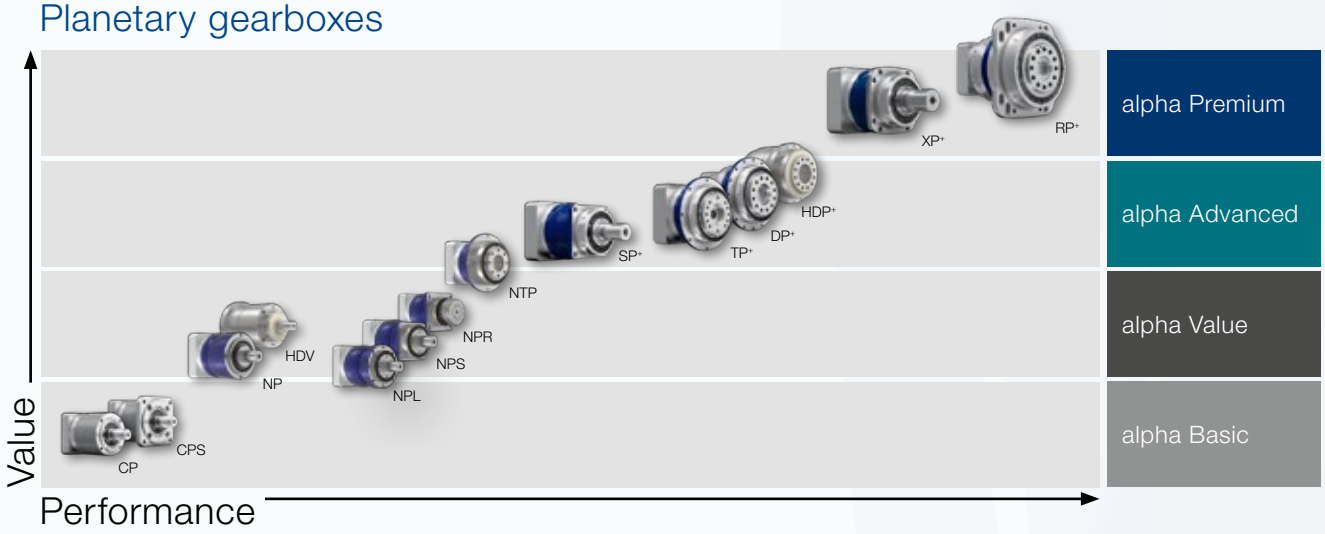

Hypoid, bevel and worm gearboxes

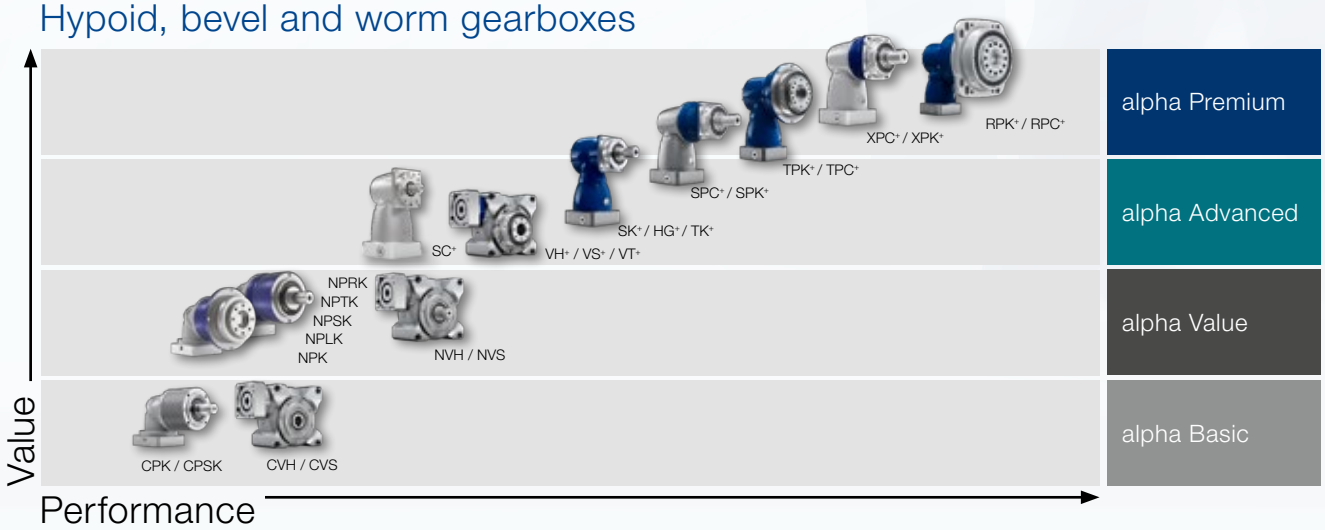

Know-how in every sector

Our solutions range from high-precision axes in manufacturing systems to packaging machines which must operate at maximum productivity in the smallest installation space.

Overview:
· Machine tools and production technology
· Food and packaging machines
· Wood working machinery
· Printing and paper machines
· Robotics and automation

Linear systems

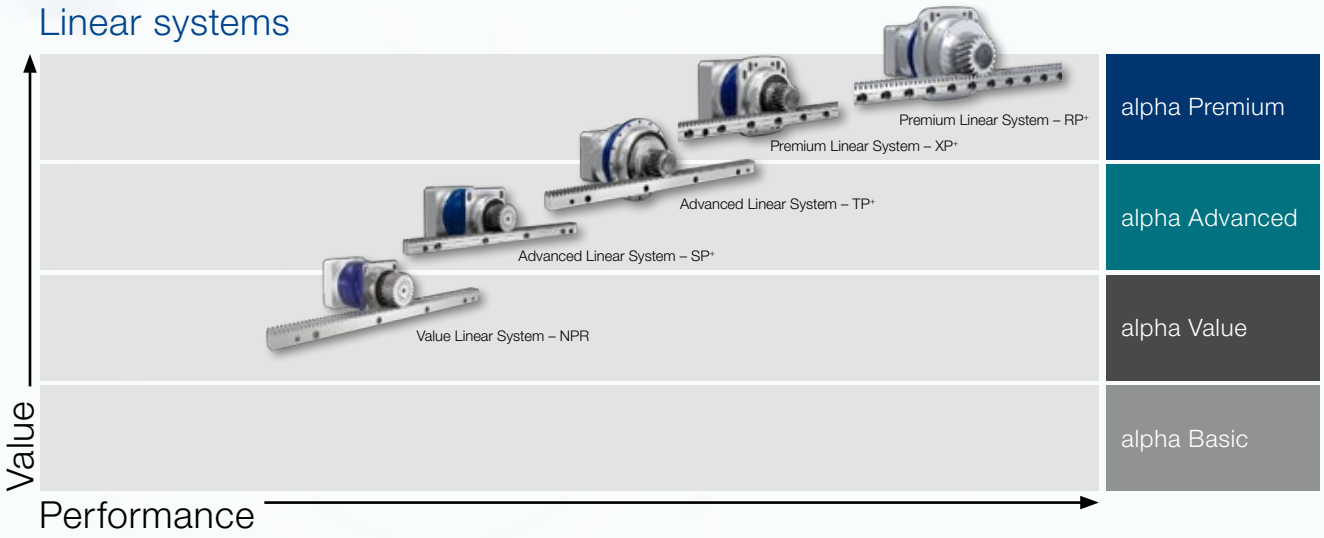

Servo actuators

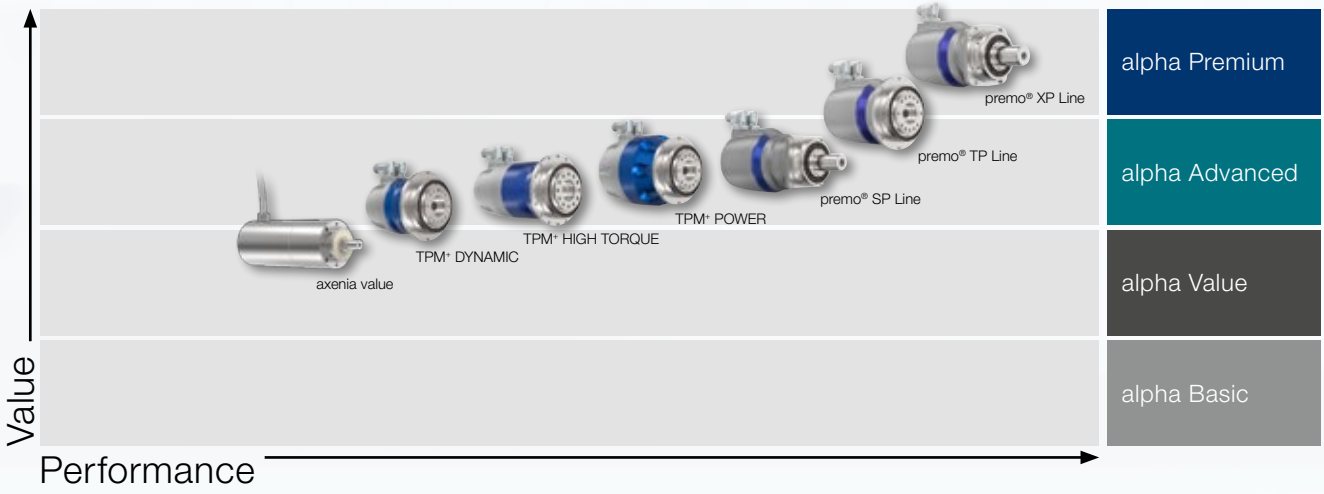

Linear systems from WITTENSTEIN alpha – the perfect symbiosis of state-of-the-art technology and many years of experience.

System solutions count

Our unique knowledge extends from the coupling of gearboxes, motors, pinions and racks to outstanding system solutions. We offer solutions perfectly designed to meet your specific needs in terms of the smooth running, positioning accuracy and feed force of linear drives.
Benefit from maximum performance across the board:
· Maximum precision
· Highest dynamics
· Optimum rigidity
· Maximum service life

Our linear systems are the result of more than 35 years of experience in the fields of gearbox design, toothing technology and the dimensioning of complete drive systems.

For a wide range of applications

Linear systems of WITTENSTEIN alpha are suitable for a wide range of applications and industries. New standards and advantages have been achieved in the following areas:
· Smooth running
· Positioning accuracy
· Feed force
· Power density
· Rigidity
· Ease of installation
· Structural design
· Scalability

Paired with a comprehensive range of services, we pledge to support you from the initial concept design to the installation and commissioning phase. Additionally we ensure a seamless supply of spare parts.

Your benefits at a glance

· Perfectly matched components
· Maximum efficiency and power density
· Exceptional linear system rigidity for even greater dynamics and precision
· Simple mounting and perfect integration in the drive train
· Available in different sizes, power categories and segments

Consultation and quality – everything from a single source!

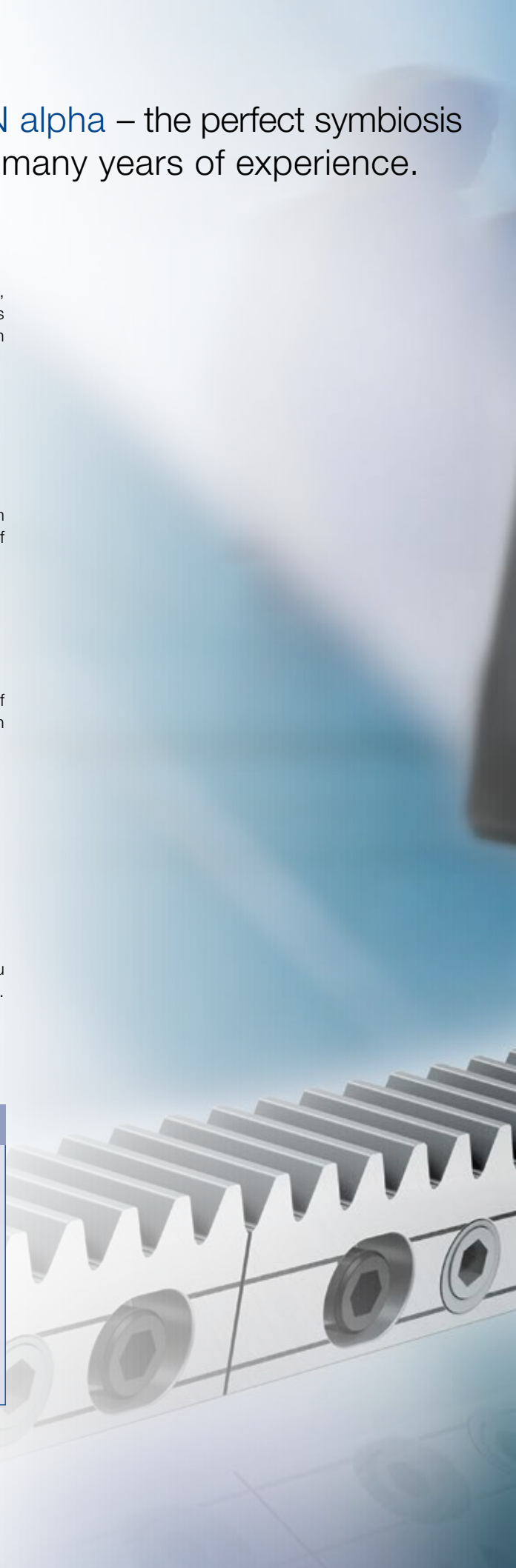



The right linear system for every application

Value Linear Systems

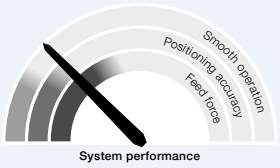

The Value Linear Systems are adapted to linear applications in the Value Segment with comparatively low requirements in terms of smooth running, positioning accuracy and feed force. The R-flange of the Premium Segment now provides greater design freedom in the Value Segment. Typical fields of application include wood working machinery, plasma cutting systems and automation.



Advanced Linear Systems

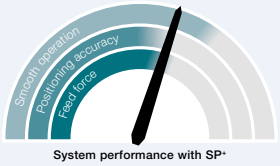

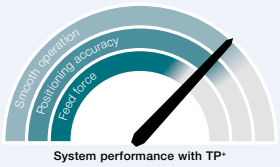

These systems are adapted to applications with average to high demands in terms of smooth running, positioning accuracy and feed force. Different gearbox versions and options such as HIGH TORQUE or HIGH SPEED can be selected to utilize the most appropriate system for the application. Typical fields of application include wood, plastic and composite machining, machining centers and automation.



Premium Linear Systems

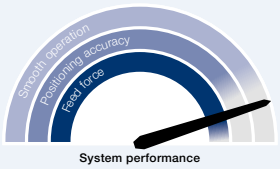

The Premium Linear Systems are adapted specifically to applications with extremely high demands in terms of smooth running, positioning accuracy and feed force. They offer drives with an outstanding power density, maximum linear system rigidity and extreme precision both in a single drive and master/slave configuration for maximum design freedom. The option of downsizing also offers savings potential in the drive train. Typical fields of application include laser machines, wood, plastic and composite machining centers, cutting machine tools, e.g. HSC milling machines as well as highly dynamic precision handling applications.



The full array of linear systems

In addition to the standard planetary gearboxes, the respective servo worm and servo right-angle gearboxes are also available for our rack and pinion systems. The integrated TPM+, RPM+ and premo® motor/gearbox units round off the portfolio. Refer to the respective product catalogs for further information.

The alpha preferred linear system – The best of each segment

Our preferred linear systems are always comprised of the perfect combination of gearbox, pinion, rack and lubrication system. The systems are optimized with focus on the degree of utilization of the indivudual components, feed force, feed speed and rigidity.

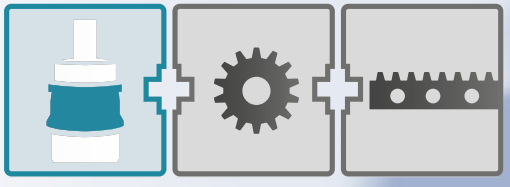

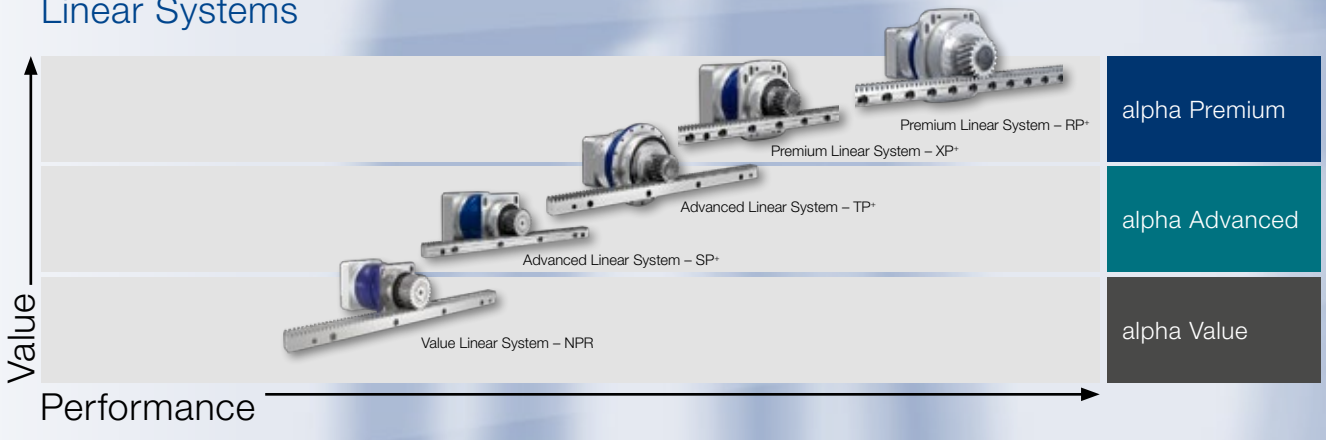

WITTENSTEIN alpha – suitable for all axes

We offer complete linear drive solutions for each axis from a single source. The fields of application of our linear systems are nearly unlimited, ranging from automation solutions to high-precision axes in machine tools and manufacturing systems which are required to achieve maximum productivity. We always stand as a synonym for the highest quality and reliability, extremely smooth running and high positioning accuracy and feed force combined with maximum power density and outstanding rigidity. Our linear systems offer innovative drive and assembly solutions.



User-friendly assembly solutions

R-flange

Racks with a length of 500 - 2,000 mm and with various options

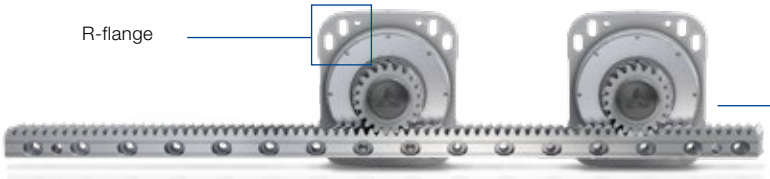

Premium Linear System, master/slave drive system

INIRA®
· clamping
· adjusting
· pinning

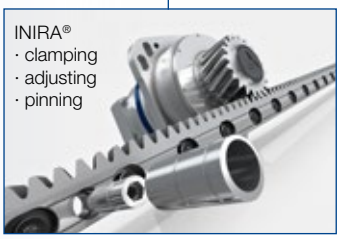



premo® XP Line

References across all segments



7th Axis
Source: YASKAWA Nordic AB



Pipe bending machine
Source: Wafios AG



CNC machining centers for wood, plastic and composite materials
Source: MAKA Systems GmbH

Exemplary product solutions in a portal milling machine



Premium Linear System with RPM+



Value Linear System with NPR

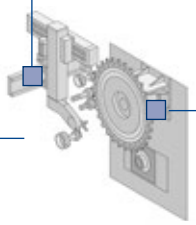



premo® TP Line

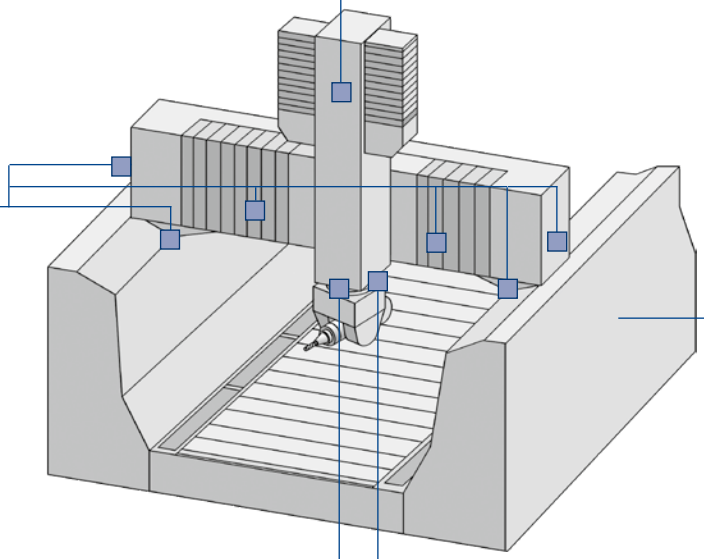



Galaxie® drive system

Lubrication systems
for all axes





Flatbed laser
Source: Yamazaki Mazak Corporation



Press transfer
Source: Strothmann Machines & Handling GmbH



HSC portal milling machine
Source: F. Zimmermann GmbH

Preferred linear systems for all requirements

We have assembled the perfect combination of gearbox, pinion and rack for each segment. This is how you find the best suited preferred linear system for your requirements in the Value, Advanced and Premium Segments.

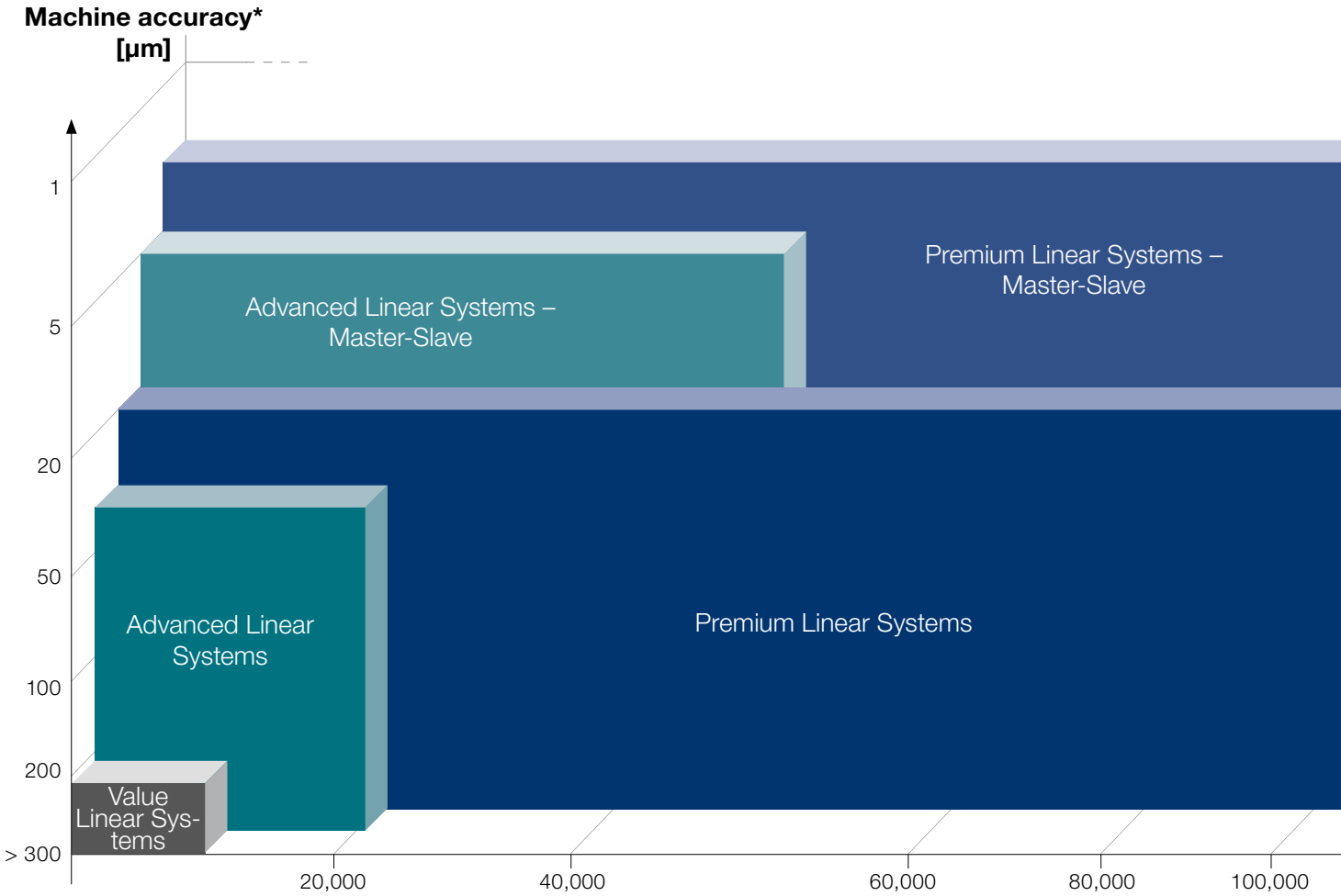

The performance spectrum of our preferred linear systems of the Value, Advanced and Premium Segments.

The wide application range of our linear systems

Value Linear Systems | Advanced Linear Systems

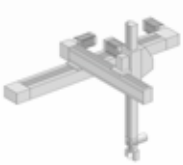

Pick and place robot

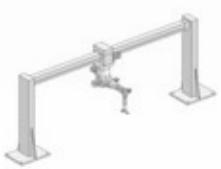

Welding robot

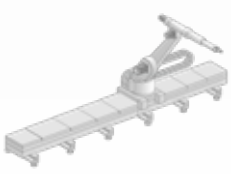

7th Axis



Plasma cutting system

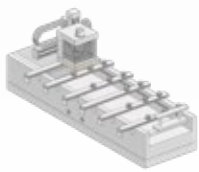

Wood working

Here you can find the correct preferred linear systems in the Value (VLS), Advanced (ALS) and Premium (PLS) Segments.

Value Linear System		Advanced Linear System				Premium Linear System		
with NPR	Page	with SP+	Page	with TP+	Page	with XP+	with RP+	Page
				ALS 1	64			
VLS 2	38	ALS 2	54	ALS 2	66			
VLS 3	40	ALS 3	56	ALS 3	68			
VLS 4	42							
						PLS 5		86
VLS 6	44	ALS 6	58					
VLS 8	46	ALS 8	60			PLS 8		88
							PLS 10	92
						PLS 11		90
		ALS 12	62	ALS 12	70			
							PLS 13	94
				ALS 20	72		PLS 20	96
				ALS 21	78			
							PLS 22	98
							PLS 36	100
							PLS 47	102
							PLS 75	104
							PLS 112	106

VLS / ALS / PLS = system designation

1 – 112 = maximum feed force in kN

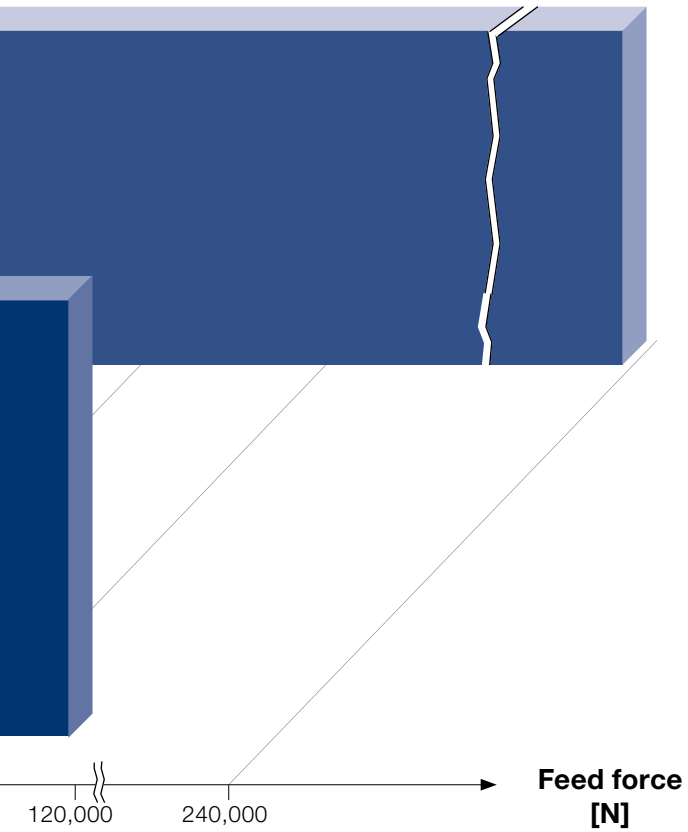

* depending on other parameters

Premium Linear Systems

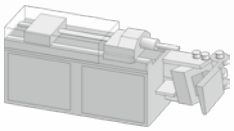

Pipe bending machine

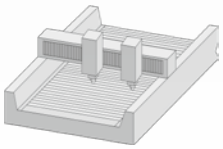

Flatbed laser

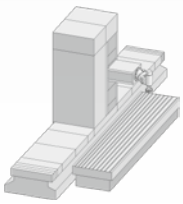

Travelling column milling machine

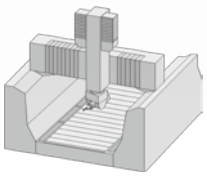

Portal milling machine

The R-flange sets the standard

The R-flange has become indispensable in rack and pinion drive trains: It is the benchmark for modularity and ease of installation – together with a host of design options.

A wide range of convincing benefits:

Design benefits:

- Reduced number of components and therefore lower design and materials management costs.
- Greater design flexibility because the centering length of the gearbox is not reduced by additional adjustment plates or other solutions.
- Realization of significantly more rigid connecting structures.
- Rectangular gearbox flange for simple centering of the gearbox.
- A bolt connection adapted to the drive train eliminates the need for additional calculations of the connection geometry.

Assembly / production benefits:

- Slots integrated in the gearbox flange make it easy to position the gearbox with a mounted pinion in relation to the rack. During the adjustment process, the gearbox is guided by the guide surface on the gearbox flange.
- A milled guide surface on the machine slide is sufficient here.
- Less mounting effort due to a significant reduction in the number of fastening screws. Additional threaded holes in the gearbox flange allow for simple handling.

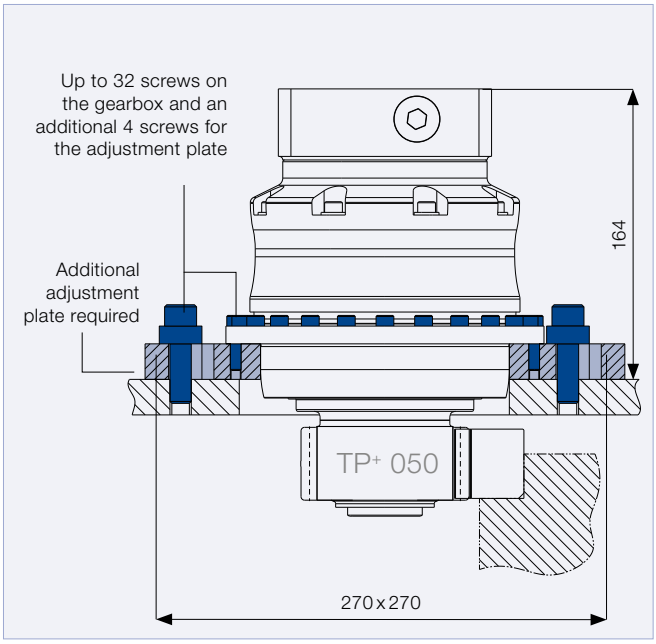

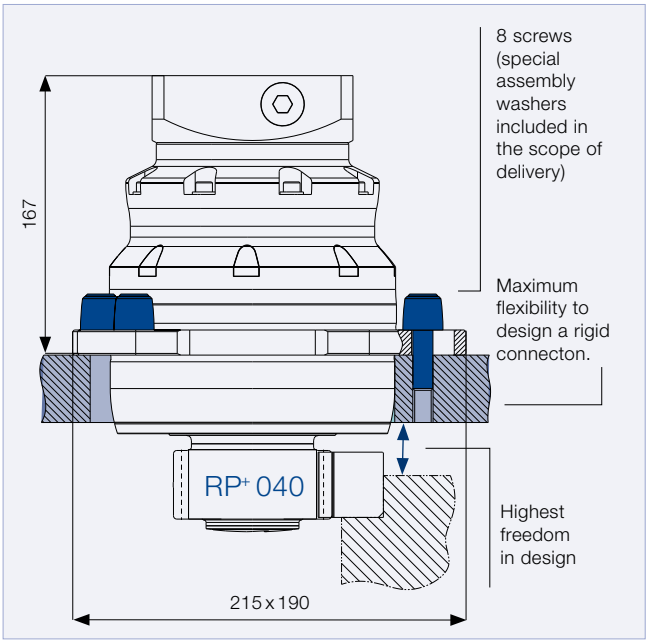

The RP+ generates more than twice the feed force of the TP+ 050 (industry standard) at the same space requirements.

A wide variety of variants and applications

The R-flange is available for gearboxes from the RP series as well as the following gearboxes:

- NPR
- SP⁺ R
- XP⁺ R; XPC⁺ R; XPK⁺ R, PHG
- RP⁺; RPC⁺; RPK⁺; RPM⁺

The highlights

- The high-performance planetary gearboxes are setting new standards in terms of power density, rigidity, transmittable torques and ease of installation
- In the servo actuator version RPM⁺, the permanently actuated servo motor with extremely compact special design ensures maximum power density and dynamics
- Right-angle gearboxes RPC⁺ , RPK⁺, XPC⁺ R and XPK⁺ R are the perfect solution to limited installation space. Different ratios allow for a precise adaptation to the particular application
- The RP⁺ and XP⁺ families are optimized for our RMW pinions
- On request, RP⁺ variants are also available with threaded holes in the output flange for your individual solution



NPR



SP⁺ R



XPC⁺ R



RPM⁺

You have the choice

Our preferred linear systems already offer the ideal pre-selection of pinions in terms of smooth running, positioning accuracy and feed force – matched with the gearbox and rack. WITTENSTEIN alpha offers an additional wide selection of different variants. In case your requirements extend beyond the capabilities offered by the preferred linear system, cymex® 5 gives you the option of selecting the perfect pinion from a comprehensive database. Starting with your application, you can configure an individual linear system and optimize the feed speed, feed force and rigidity. Our sales engineers and application consultants would be happy to help you design your system.

All of our pinions are supplied factory assembled – offering you the following benefits:

- Tested quality by 100 % final inspection
- Maximum quality and reliability
- Perfect calibration of the tooth backlash between pinion and rack due to aligned pinion and marked high point
- Prevention of potential sources of error and reduced assembly effort

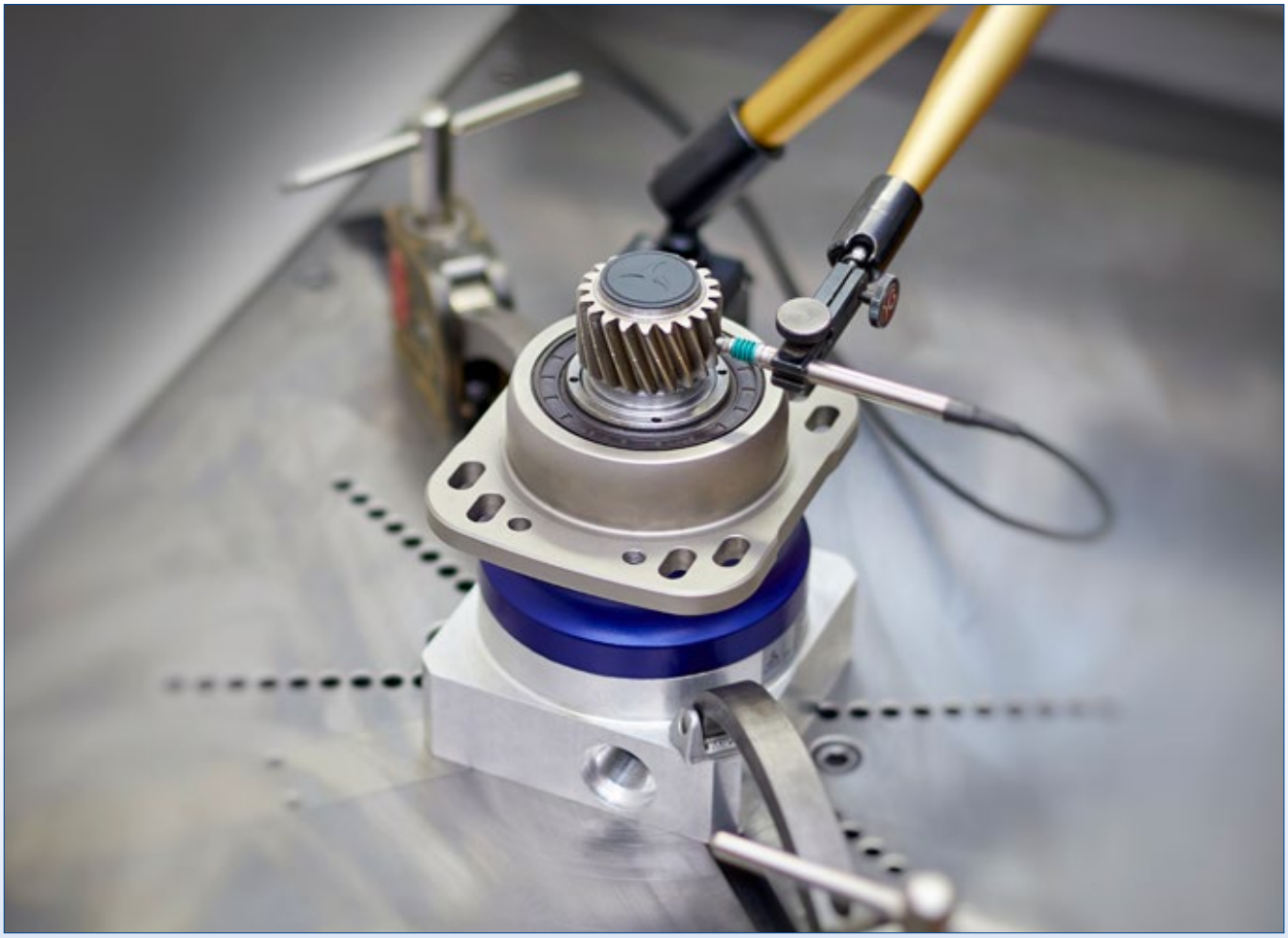

Overview of pinion variants

RMK – pinion mounted on keyed shaft

- Precise toothing with optimally designed toothing geometry
- Backlash-free shrink-fit/bonded connection with parallel key as overload protection ensures perfect seating of the pinion throughout the entire service life
- Application-specific variants available



RMS – pinion mounted on splined shaft (DIN 5480)

- Precise toothing with optimally designed toothing geometry
- Form fit connection between pinion and gearbox output shaft
- Compact design
- With marked high point
- Application-specific variants available



RMF – pinion mounted on flange

- High-precision and optimally designed toothing geometry for superior smooth running, high positioning accuracy and outstanding power transmission in the application
- Adapted to the standard gearbox series with the proven TP+ flange
- High feed speeds with low input speeds thanks to large pitch diameter
- Compact pinion/gearbox connection
- With marked high point
- Application-specific variants available



RMW – pinion mounted on system output

- Perfectly designed high-precision toothing geometry for maximum smooth running, high positioning accuracy and highest feed forces in the application
- Innovative pinion/gearbox connection ensures:
  - Highest linear rigidity through the direct connection of pinions with small pitch circle diameter
  - Maximum flexibility in pinion selection
  - Compact drive design
- With marked high point
- Application-specific variants available



INIRA®: The revolution in rack assembly

INIRA® combines our existing innovative concepts for the simple, safe and efficient installation of racks. INIRA® clamping, INIRA® adjusting and INIRA® pinning have already made the assembly process much faster, more accurate and more ergonomic. Available for the Advanced and Premium Linear Systems.

Simply scan the QR code using your smartphone to experience INIRA® in action.

INIRA® clamping: Simply faster and more ergonomic

Previously, enormous effort was required to clamp racks to the machine bed using screw clamps. INIRA® clamping integrates the clamping device into the rack. The clamping is achieved quickly and ergonomically by the use of a mounting sleeve which is guided by the head of the fastening screw.

INIRA® adjusting: Simply safer and more precise

In combination with INIRA® clamping, INIRA® adjusting is the ideal solution for perfect adjustment of the transition between two rack segments. With the innovative adjustment tool, the transition can be adjusted safely and accurately, precise to the micron.

INIRA® pinning: Simply better and more efficient

The previous method used for pinning racks was extremely time-consuming. Precise bores had to be drilled and the generated chips carefully removed from the assembly. INIRA® pinning now offers a completely new solution for the chipless pinning of racks, which reduces installation times considerably (time spent on each rack ~ 1 min).

See page 160 for more information about racks.



INIRA® clamping



INIRA® adjusting



INIRA® pinning

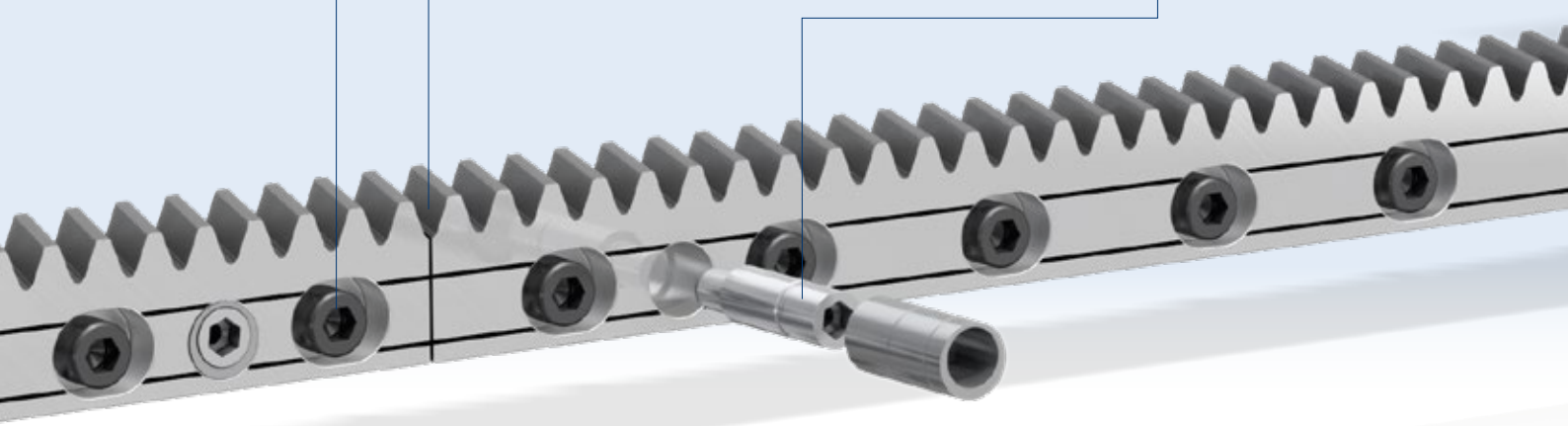

We have the suitable rack for every requirement – in all quality categories

When developing your machine concept, you will of course need to find a suitable rack. We will help you find the right one. You can select the ideal rack for your application, depending on your requirements in terms of smooth running, positioning accuracy, feed force, length and installation.

Besides our INIRA® racks, there are standard racks for the Advanced Linear Systems and Premium Linear Systems available.

Our preferred linear systems of the Value, Advanced und Premium Line already contain a preselection of components whose parameters have been perfectly adapted to the respective system. In order to meet your rack requirements, we employ flexibly adapted production processes. It goes without saying that racks for High Performance applications are case-hardened to meet demanding feed force requirements and guarantee maximum system performance throughout the entire service life of the rack.

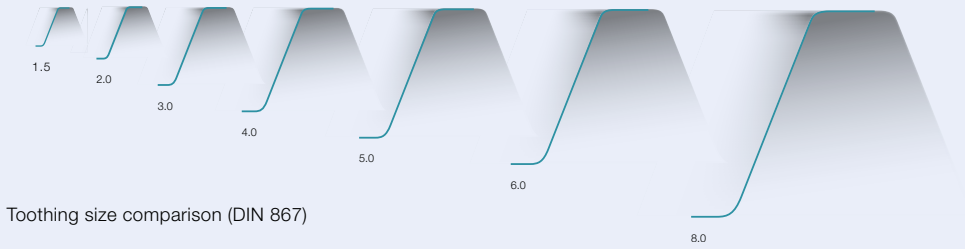

Toothing size comparison (DIN 867)

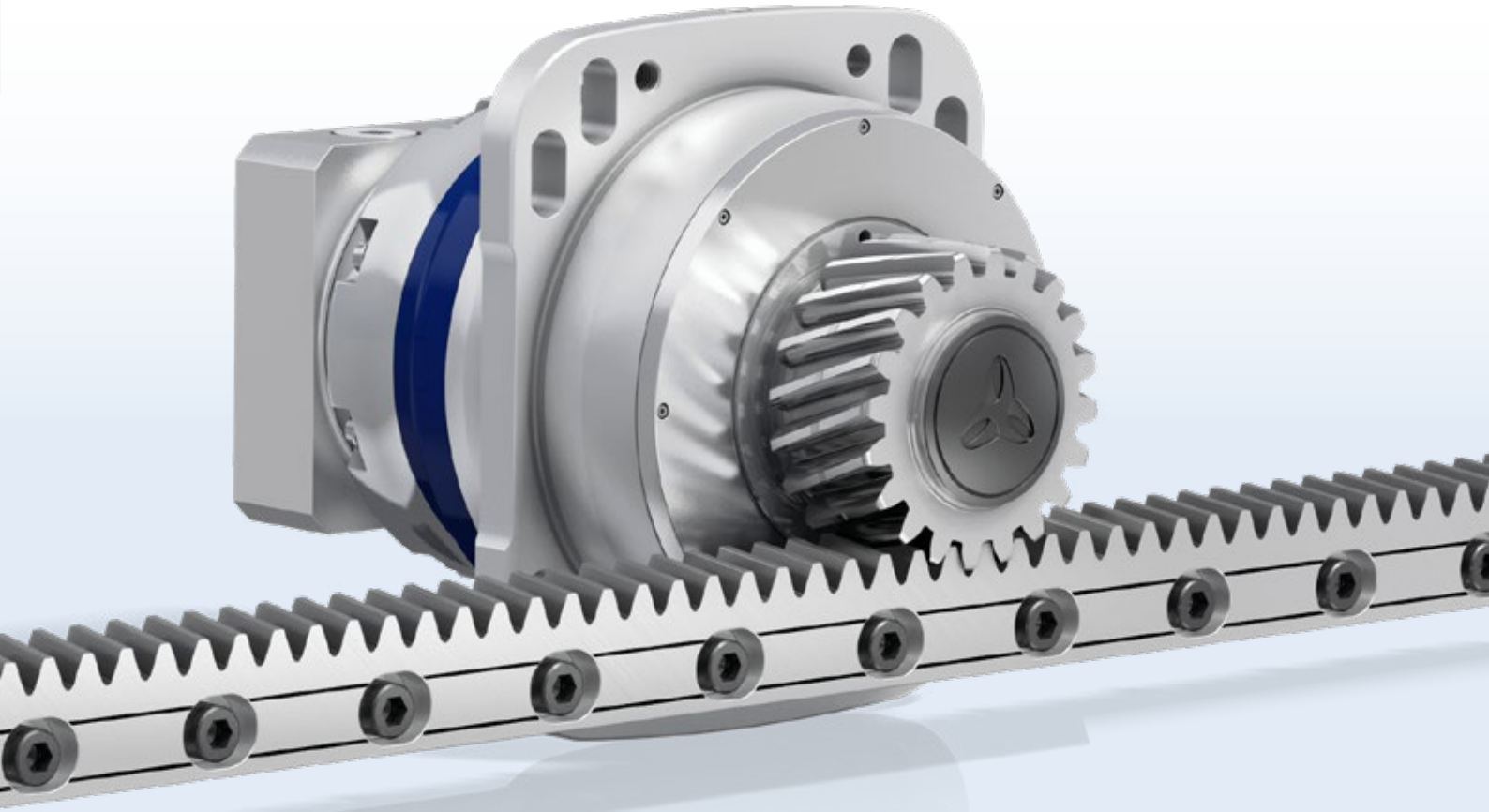

WITTENSTEIN alpha Engineering Tools – many ways to reach your goals

Our software portfolio helps you choose the optimal drive

You can conveniently download dimension sheets and CAD data, select the best gearbox quickly and easily design complex kinematic sequences in detail – our software solutions offer various methods of selecting the best, most reliable drive on all axes.

CAD POINT – Your smart catalog

- Performance data, dimension sheets and CAD data for all types of gearboxes
- Available online without logging in
- Comprehensive documentation of the selection

www.wittenstein-cad-point.com

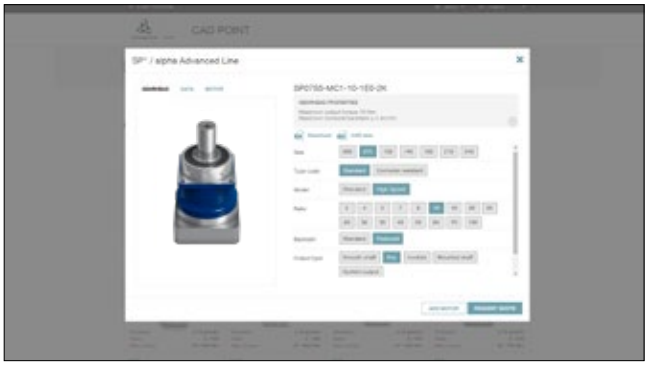

cymex® select – Best solution within seconds

- Efficient and customizable product selection in seconds
- Top three product recommendations for your requirements
- Available online without login
- Possibility of requesting quotation quickly and directly

cymex-select.wittenstein-group.com

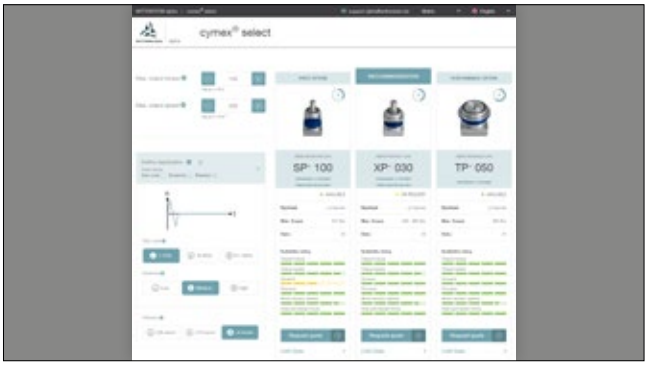

cymex® 5 – Calculate on the Best

- Detailed calculation of complete drive trains
- Precise simulation of motion and load variables
- Downloadable software for complex designs

www.wittenstein-cymex.com





Support at each interaction stage

With the WITTENSTEIN alpha service concept, we are also setting new standards in the field of customer support.

DESIGN



We offer the right sizing methodology for every requirement. Whether easy downloading of CAD data, quick and easy calculation, or precise sizing of the drive train.

STARTUP



Our service experts are happy to support you in the installation and startup of complex mechatronic systems, guaranteeing maximum availability of your plant.

SERVICING



WITTENSTEIN alpha guarantees fast repairs of the highest quality and precision. In addition, we will provide you with information about various measurements, material analyses, and condition monitoring inspections.

Consultation
· Personal contact on site
· Competent application calculations and drive sizing

Engineering
Catalog gearboxes:
· Advanced software tools for accurate calculation, simulation, and analysis of the drive train
· Optimization of your productivity

Special gearboxes:
· Development and production of customized gearboxes
· Gearing design and development
· Inquiries: **sondergetriebe@wittenstein.de**

CAD POINT
YOUR SMART CATALOG

cymex® select
BEST SOLUTION WITHIN SECONDS

cymex®5
CALCULATE ON THE BEST

speedline® delivery
Tel. +49 7931 493-10444
· Delivery of standard product range in 24 or 48 hours ex works*
· Fast deliveries at short notice

Installation on site
· Professional installation
· Optimal application integration
· Introduction to the operation of the drive

Operating and installation instructions
· Detail description of how to use the product
· Installation and motor mounting videos

* Non-binding delivery time depending on part availability

WITTENSTEIN Service Portal
One gate. All support.

WITTENSTEIN Service Portal
· Instant Access to Product Information
· Quick Installation and Commissioning for example Tutorial-Videos

Pick-up & return service
· Minimization of downtimes
· Professional logistics organization
· Reduction of transport risks

24 h service hotline
Tel. +49 7931 493-12900

Maintenance and inspection
· Documentation regarding condition and expected service life
· Customer-specific maintenance schedules

Repairs
· Repair to nominal condition
· Immediate response in time-critical situations

cymex® statistics
· Systematic field data acquisition
· Reliability calculations (MTBF)

WITTENSTEIN Service Portal
One gate. All support.

WITTENSTEIN Service Portal
· Fast Processing of Replacement Products
· The Right Contact for Queries
· Tailor-Made Maintenance Services

Modernization
· Professional retrofitting
· Reliable compatibility testing of existing solutions

cynapse® – It´s new. It´s connective. The smart feature.

Cybertronic drive systems that can independently acquire and communicate information are an essential prerequisite for IIoT. WITTENSTEIN alpha is the first component manufacturer to offer smart gearboxes as standard – gearboxes with cynapse®. They have an integrated sensor module that makes Industry 4.0 connectivity possible.

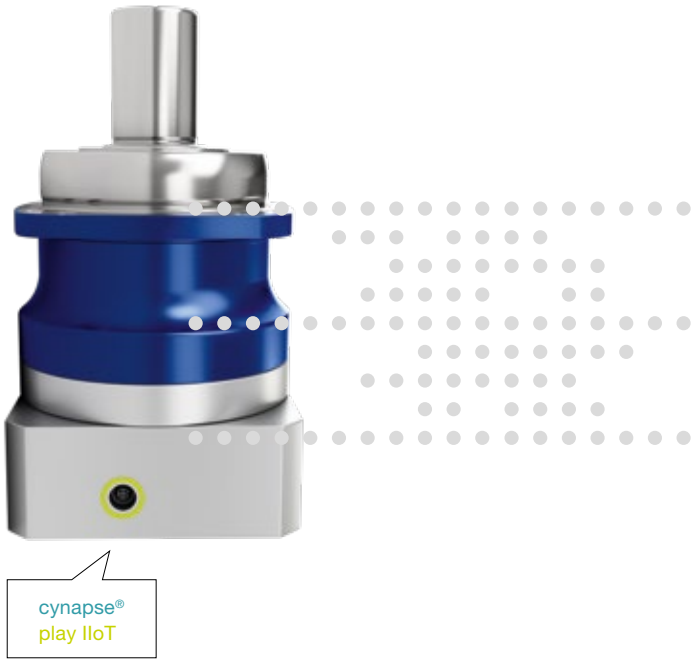

cynapse® – how it works

cynapse® ensures the gearbox can be easily integrated into the digital world. The cynapse® feature is integrated into the existing installation space and is connected via an IO-Link interface. As a result, measured data such as the gearbox's **temperature, vibration, operating time, acceleration, and product-specific information** can be accessed.

cynapse® wins customers over with:

- Sensor module integrated into the installation space
- Simple connection by IO-Link interface
- Gearbox threshold monitoring
- Quick product identification thanks to digital name plate

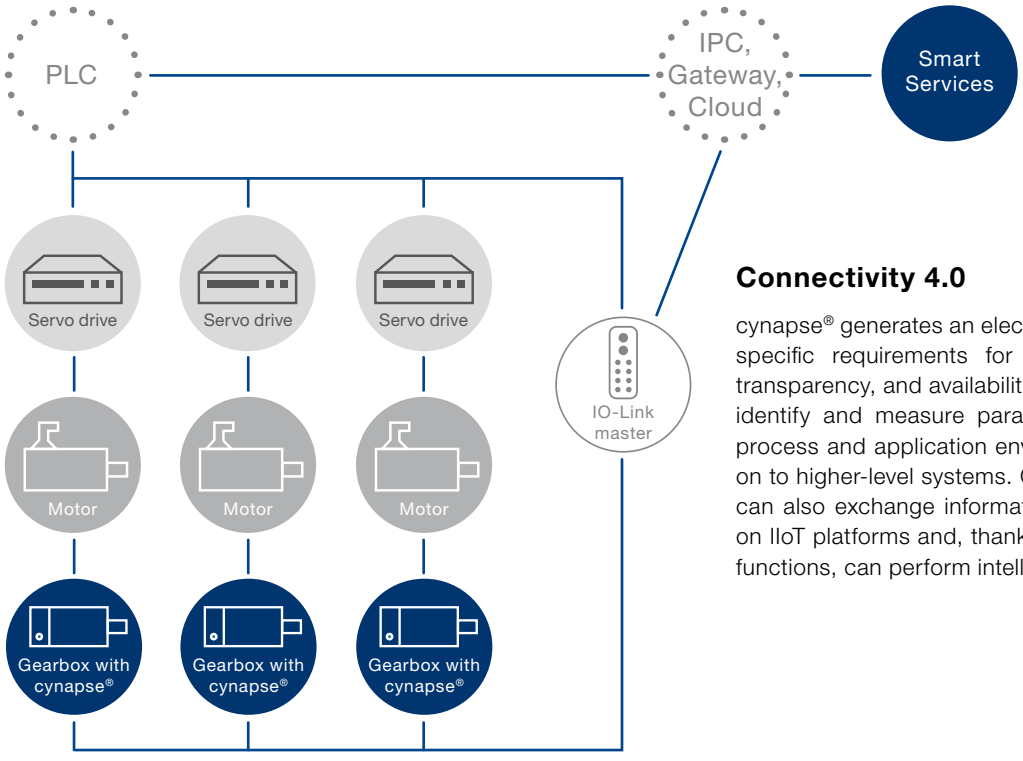

Connectivity 4.0

cynapse® generates an electronic "fingerprint" of your specific requirements for performance, efficiency, transparency, and availability. The smart gearbox can identify and measure parameters directly from the process and application environment and pass them on to higher-level systems. Gearboxes with cynapse® can also exchange information with the applications on IIoT platforms and, thanks to their integrated logic functions, can perform intelligent monitoring tasks.

Smart Services – the perfect complement

The Smart Services expand the functional scope of the cynapse® feature. The basic functions comprise data processing, visualization, and analysis. The specific expertise, which WITTENSTEIN has gathered over more than 40 years of developing low-backlash planetary gearboxes, is used in combination with the operating data to establish and display the status of the gearbox in the Smart Services.

Your benefits at a glance

- Visualization of the operating data
- Simple and convenient integration
- Determination and monitoring of critical threshold values
- Early identification of problematic statuses
- Avoidance of machine downtimes and associated costs
- Transparency for drive axis

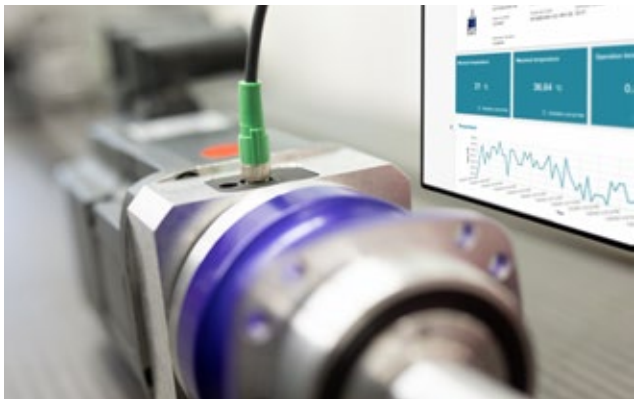



cynapse® Connect

cynapse® Connect enables integration and routing of data, which is a fundamental prerequisite for condition monitoring. The Smart Service makes the recorded data available in a structured format. It can obtain this data from various source systems via IO-Link or OPC UA and utilizes it for digital services from WITTENSTEIN. cynapse® Connect thus greatly simplifies the integration of smart gearboxes into the relevant machine infrastructure.



cynapse® Monitor

cynapse® Monitor builds upon the Smart Service cynapse® Connect and enables straightforward evaluation and visualization of operating data. Since manufacturers and operators do not have to develop their own solutions, development requirements are massively reduced. In addition, the data of the cynapse® Monitor service can be used to monitor threshold values of selected parameters. Deviations and critical states in the behavior of gearboxes or in the relevant process can therefore be identified at an early stage.



cynapse® Analyze

cynapse® Analyze is a constantly growing portfolio of smart analysis tools that enable real-time analysis of drive train data. The combination of intelligent algorithms with WITTENSTEIN alpha's core expertise in gearbox technology results in a wide range of synergy effects. The analysis tools can simultaneously monitor different points in the machine and be used for different machine applications. This enables recognition of more complex deviations in the machine process or component behavior at an early stage. Machine downtimes can be anticipated in good time, thus preventing high breakdown costs.



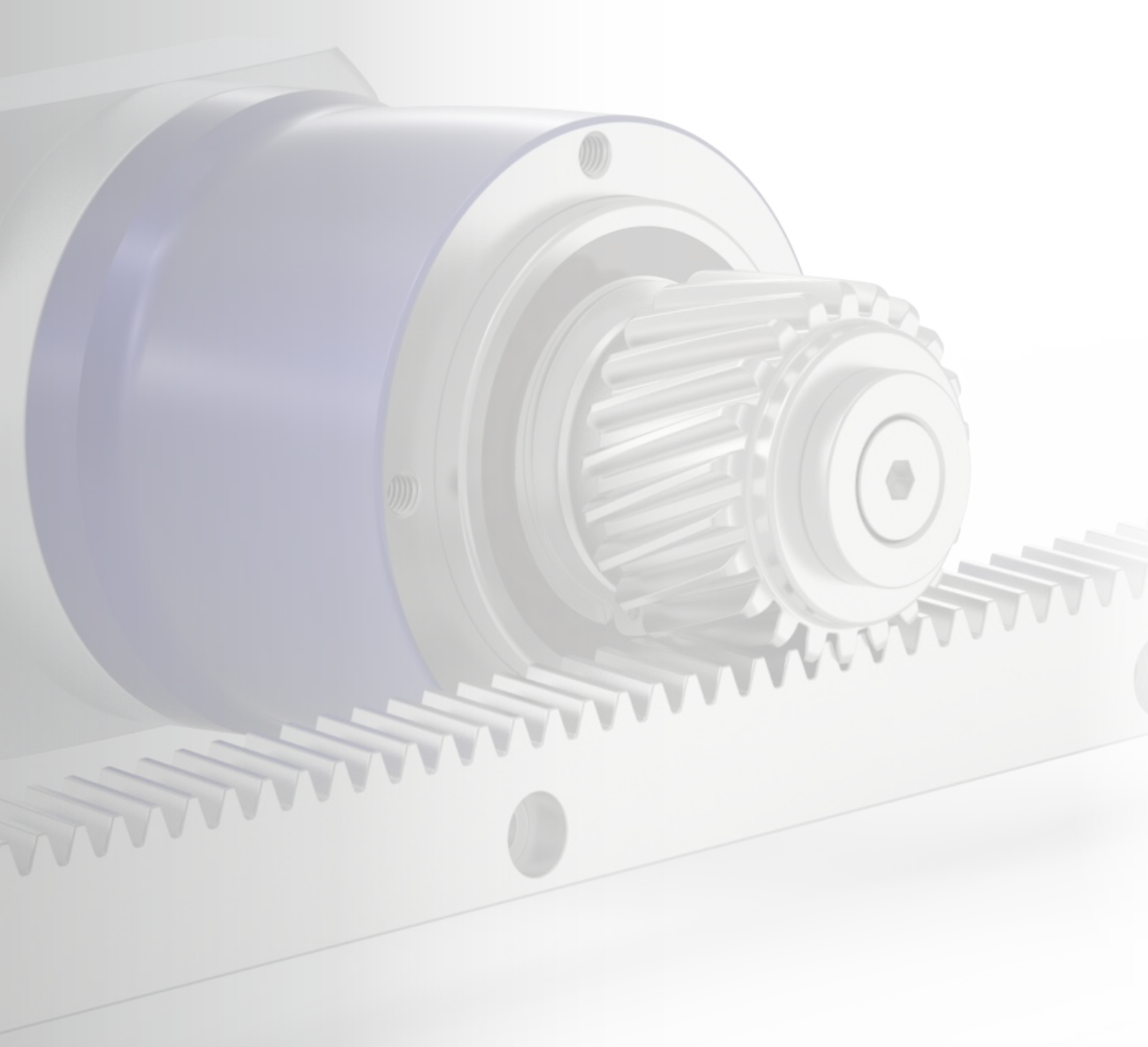

Value Linear Systems from WITTENSTEIN alpha –
flexible all-rounders in the Value Segment

The Value Linear System with **NPR** for use e.g. in plasma cutting systems, water jet cutting systems, simple laser cutting machines or even pipe bending machines with up to 8,000 N/drive train.

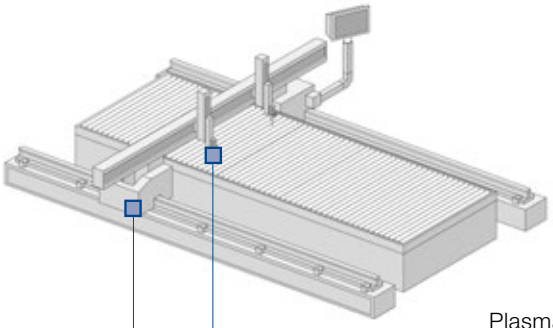

Plasma cutting system

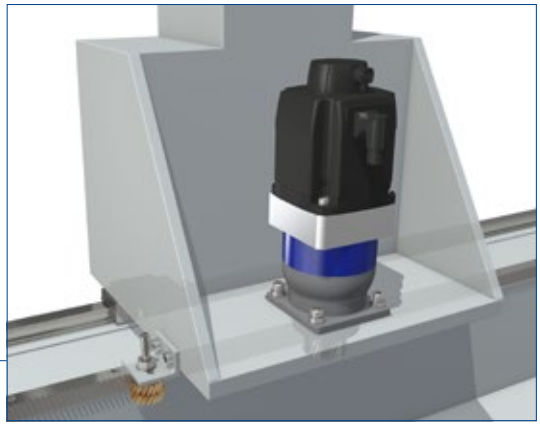

The Value Linear System with **NPR** and **NVS** are used in automation portals, welding robots, pick and place robots, 7th axis, etc.

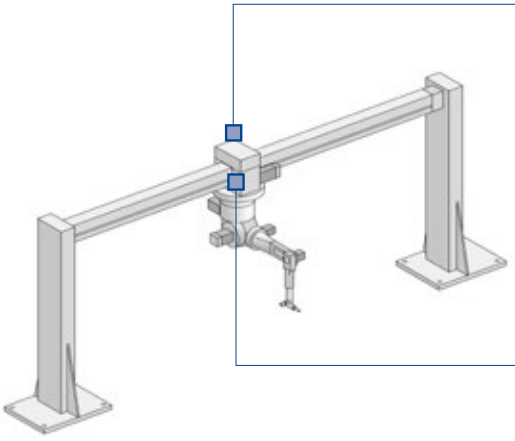

Welding robot

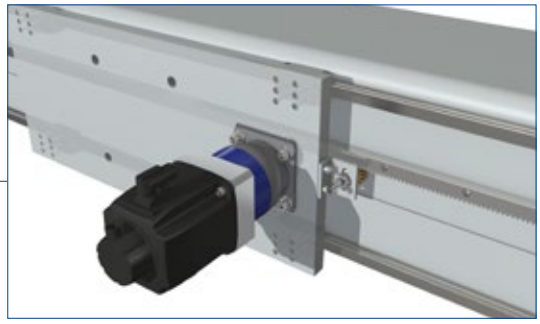

with NPR

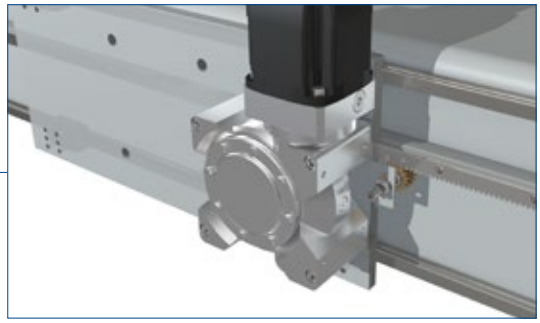

with NVS

The flexible all-rounder in the Value Segment

The Value Linear System is adapted to linear applications in the Value Segment with comparatively low requirements in terms of smooth running, positioning accuracy and feed force. The R-flange of the Premium Segment now allows greater design freedom in the Value Segment.

Your benefits in detail

- **Integrated R-flange for simple design and assembly**
- **Perfectly adapted to the Value Line systems**
- **Available with NVS worm gear**

	Value Linear System	Max. feed force [N]	Max. feed speed [m/min]
with NPR	VLS 2	1890	253
	VLS 3	3220	342
	VLS 4	4300	347
	VLS 6	6150	400
	VLS 8	8000	160

Feed force and feed speed dependent on ratio



NPR

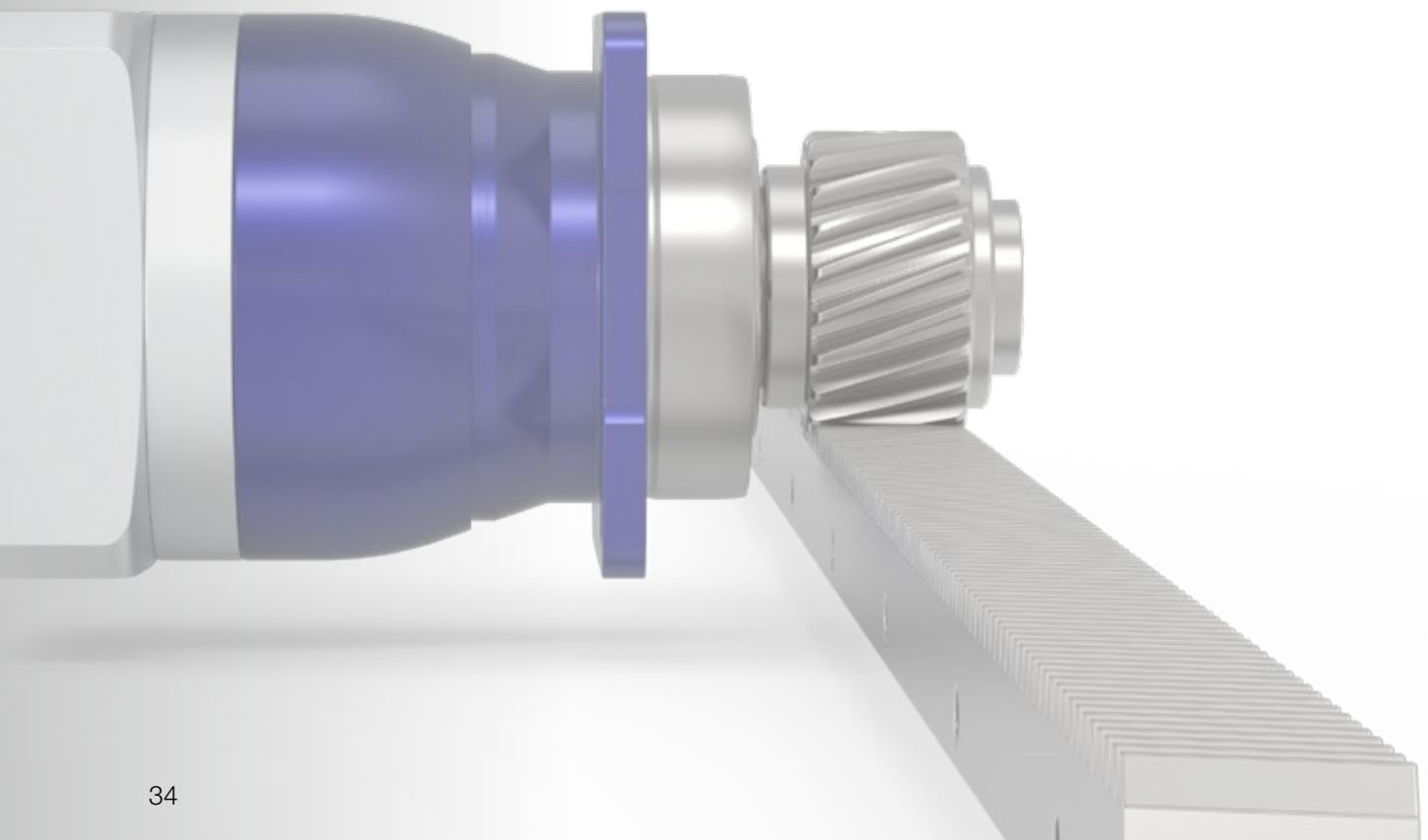

Quick system selection

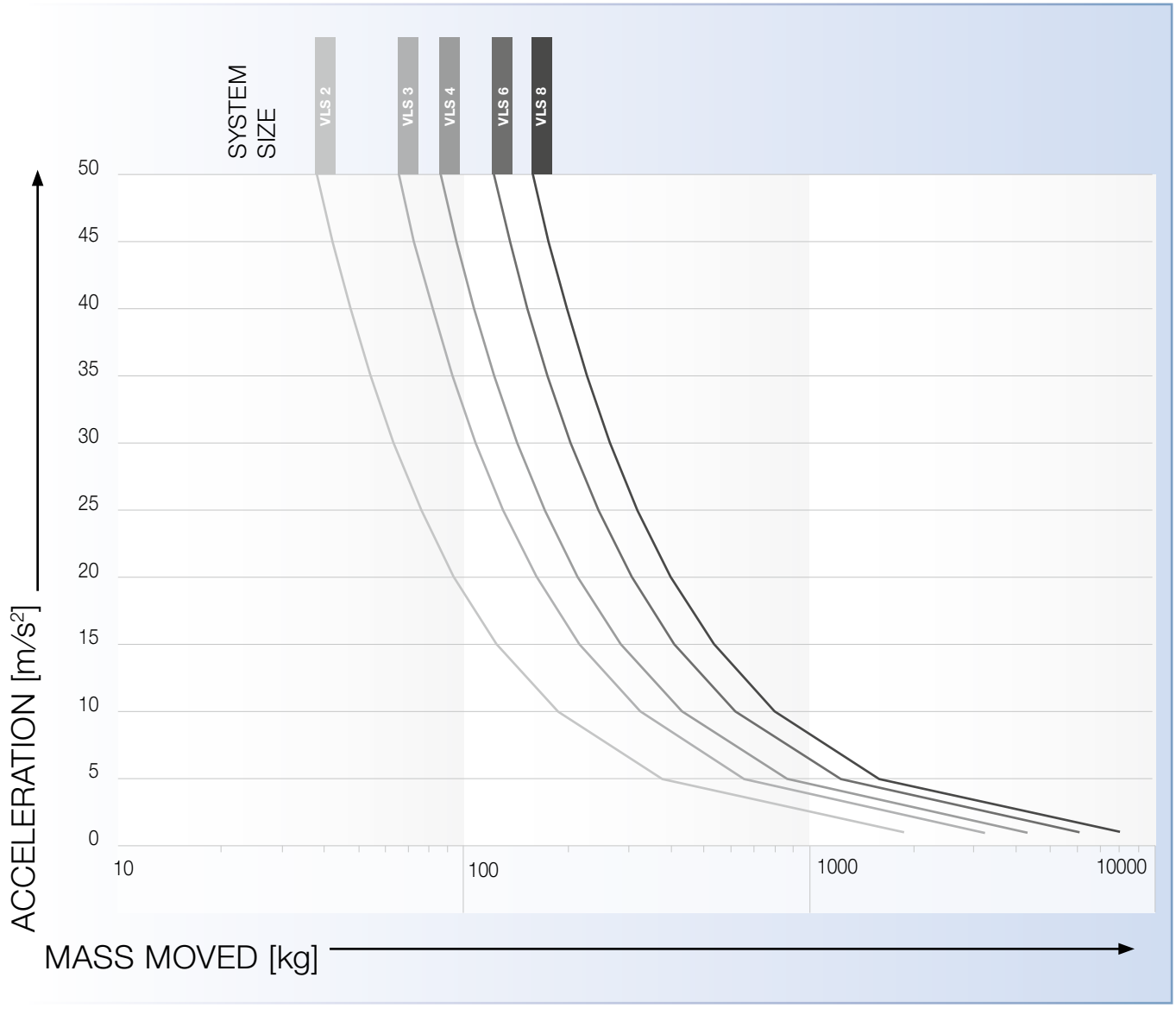

Value Linear Systems overview

Our preferred linear systems are always comprised of the perfect combination of gearbox, pinion, rack and lubrication system. The systems are optimized to achieve the required feed force, feed speed, rigidity and degree of utilization of the individual components. Depending on your individual requirements, you have the option to further configure products via the ordering code. For a detailed dimensioning and configuration of the products we recommend to use cymex® 5.

System	Gearbox	Pinion	Rack*
VLS 2	NPR 015S	RMK 150-222-19L1-016	ZST 150-221-1000-R1
VLS 3	NPR 025S	RMK 200-222-22L1-022	ZST 200-221-1000-R1
VLS 4	NPR 035S	RMK 200-222-26L1-032	ZST 200-221-1000-R1
VLS 6	NPR 035S	RMS 300-323-20L1-032	ZST 300-221-1000-R1
VLS 8	NPR 045S	RMS 300-323-20L1-040	ZST 300-221-1000-R1

* Other length options available



Assembly accessories can be found starting at page 133 and information on the lubrication system starting at page 118

Ordering code

Gearbox*

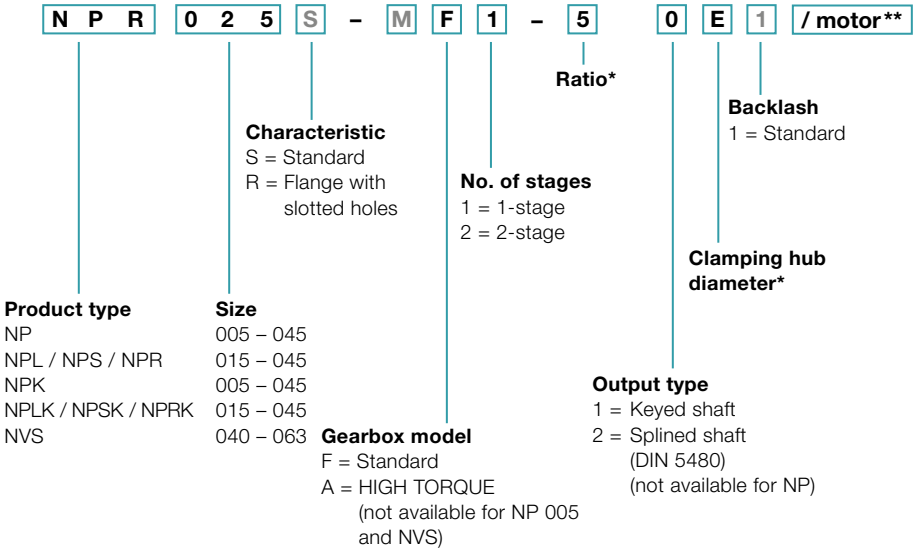

M Components with a gray font cannot be selected

* Further information about the gearboxs is available in the respective catalogs, at www.wittenstein-alpha.com or on request

** Full motor designation only required to determine gearbox mounting parts

Rack

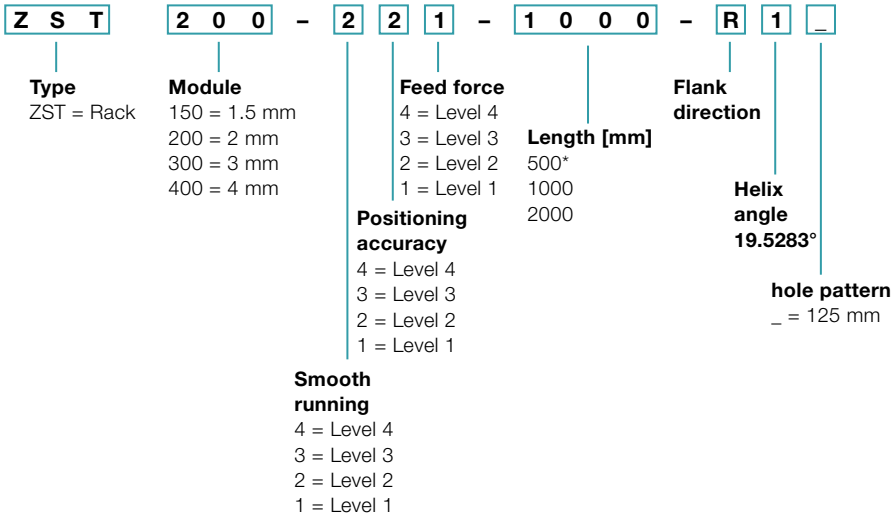

* Module 4, 493 mm

Pinion

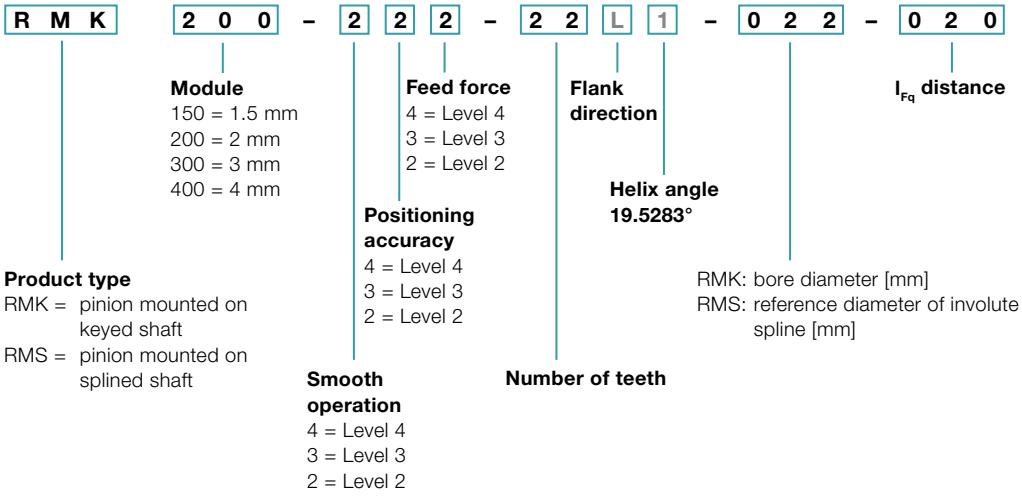

Planetary gearbox NPR 015 MF with rack module 1.5 and pinion RMK module 1.5

System	Max. feed force [1] F_{2T}		1890 N	
	Max. feed speed [2] v_{max}		253 m/min	79 m/min
Gearbox	No. of stages		1	2
	Ratios *i*		3 / 4 / 5 / 7 / 8 / 10	12 / 15 / 16 / 20 / 25 / 28 / 30 / 32 / 35 / 40 / 50 / 64 / 70 / 100
	Clamping hub diameter		9 / 11 / 14 / 16 / 19 mm	8 / 9 / 11 / 14 mm
	Designation		NPR 015S-MF1-_ _ _-1_ _	NPR 015S-MF2-_ _ _-1_ _
Pinion	Module *m*		1.5 mm	
	Number of teeth *z*		19	
	Pitch circle diameter *d*		30.239 mm	
	Profile correction factor *x*		0.3	
	Helix angle *ß*		-19.5283° (left-handed)	
	Designation		RMK 150-222-19L1-016-022	
Rack	Module *m*		1.5 mm	
	Length L (options)		1000 mm (500 mm)	
	Helix angle *ß*		19.5283° (right-handed)	
	Designation		ZST 150-221-1000-R1	
Lubrication system [3]	Set consisting of lubrication pinion and axis for	Rack	LMT 150-PU -24L1-020-1	
		Pinion	LMT 150-PU -24R1-020-1	
	Lubricator	125 cm³	LUC+125-0511-02	
		400 cm³	LUC+400-0511-02	
	Lubricant		WITTENSTEIN alpha G11	

[1] Maximum feed force depending on ratio and number of stages
[2] Calculation with lowest ratio and maximum input speed
[3] Impulse-controlled basic version with one output and 2 m hose. See page 118 for further information on the lubrication system.
Application-specific dimensioning with cymex® – www.wittenstein-cymex.com

Alternative system solutions

Pinion			**Axis distance**	**NPS/ NPL/ NPR 015S**	**NP 015S**	**NPSK/ NPLK/ NPRK 015S**	**NPK 015S**	**NVS 040**	**Rack***
Designation	*d* [mm]	*x* [ ]	*A* [mm]	F_{2T} [N]	F_{2T} [N]	F_{2T} [N]	F_{2T} [N]	F_{2T} [N]	Designation
RMK 150-222-19L1-016-022	30.239	0.3	33.070	1890	1290	1890	1290	1890	ZST 150-221-1000-R1
RMK 200-222-18L1-016-019	38.197	0.4	41.899	2080	1330	2080	1330	2230	ZST 200-221-1000-R1
RMK 200-222-18L1-016-021 [1]	38.197	0.4	41.899	2070	1300	2070	1300	2230	ZST 200-221-1000-R1
RMS 200-323-15L1-016	31.831	0.5	38.916	2240	–	2240	–	–	ZST 200-221-1000-R1
RMS 200-323-16L1-016	33.953	0.5	39.977	2220	–	2220	–	–	ZST 200-221-1000-R1
RMS 200-323-18L1-016	38.197	0.4	41.899	2080	–	2080	–	–	ZST 200-221-1000-R1

[1] without protruding contour at the pinion end
d = Pitch circle diameter
x = Addendum modification coefficient
A = Distance between pinion axle and rear surface of rack
F_{2T} = Maximum feed force depending on ratio and number of stages
Application-specific dimensioning with cymex® – www.wittenstein-cymex.com
* Other length options available

Motor shaft diameter [mm]

1-stage

up to 14 [4] (C) clamping hub diameters

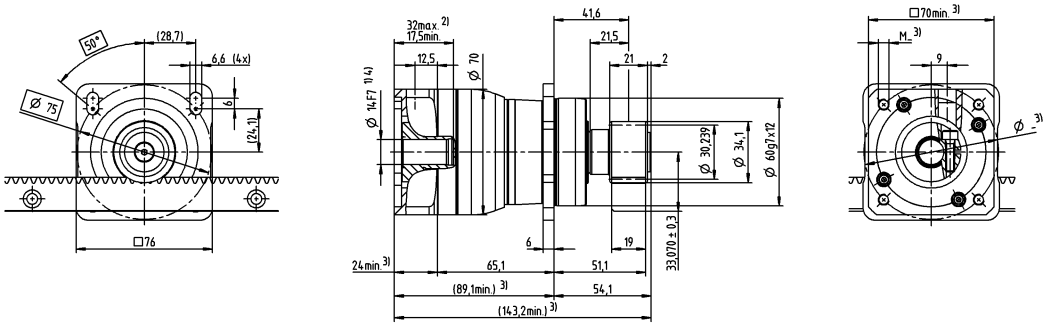

up to 19 [4] (E) clamping hub diameters

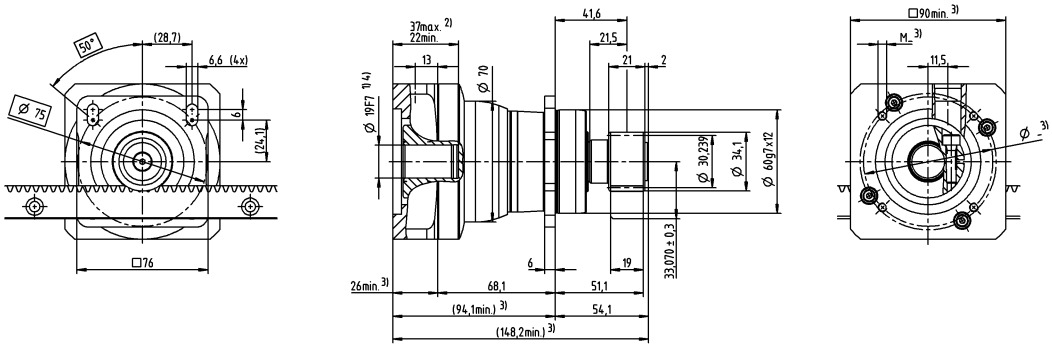

2-stage

up to 11 [4] (B) clamping hub diameters

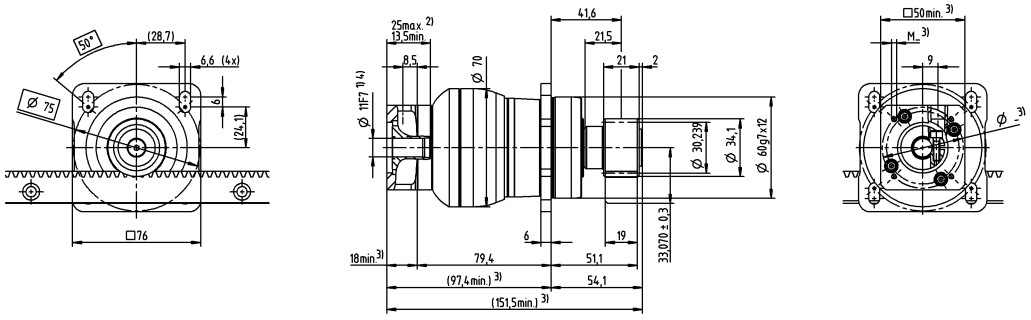

up to 14 [4] (C) clamping hub diameter

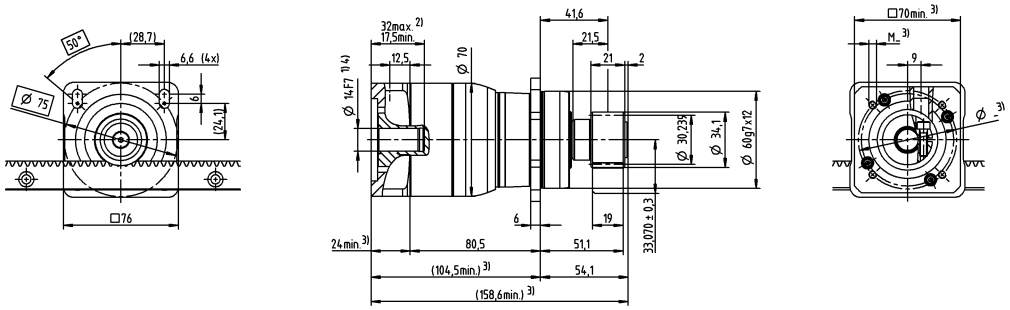

Non-tolerated dimensions are nominal dimensions
Detailed rack dimensions starting on page 161

[1] Check motor shaft fit
[2] Min./Max. permissible motor shaft length. Longer motor shafts are possible, please contact alpha.
[3] The dimensions depend on the motor
[4] Smaller motor shaft diameter is compensated by a bushing with a minimum thickness of 1 mm

Planetary gearbox NPR 025 MF with rack module 2 and pinion RMK module 2

System	Max. feed force [1] F_{2T}		3220 N	
	Max. feed speed [2] v_{max}		342 m/min	130 m/min
Gearbox	No. of stages		1	2
	Ratios *i*		3 / 4 / 5 / 7 / 8 / 10	9 / 12 / 15 / 16 / 20 / 25 / 28 / 30 / 32 / 35 / 40 / 50 / 64 / 70 / 100
	Clamping hub diameter		14 / 16 / 19 / 24 / 28 mm	9 / 11 / 14 / 16 / 19 mm
	Designation		NPR 025S-MF1-_ _ _-1_ _	NPR 025S-MF2-_ _ _-1_ _
Pinion	Module *m*		2 mm	
	Number of teeth *z*		22	
	Pitch circle diameter *d*		46.686 mm	
	Profile correction factor *x*		0.2	
	Helix angle *ß*		-19.5283° (left-handed)	
	Designation		RMK 200-222-22L1-022-020	
Rack	Module *m*		2 mm	
	Length L (options)		1000 mm (2000 mm; 500 mm)	
	Helix angle *ß*		19.5283° (right-handed)	
	Designation		ZST 200-221-1000-R1	
Lubrication system [3]	Set consisting of lubrication pinion and axis for	Rack	LMT 200-PU -18L1-024-1	
		Pinion	LMT 200-PU -18R1-024-1	
	Lubricator	125 cm^3	LUC+125-0511-02	
		400 cm^3	LUC+400-0511-02	
	Lubricant		WITTENSTEIN alpha G11	

[1] Maximum feed force depending on ratio and number of stages
[2] Calculation with lowest ratio and maximum input speed
[3] Impulse-controlled basic version with one output and 2 m hose. See page 118 for further information on the lubrication system.
Application-specific dimensioning with cymex® – www.wittenstein-cymex.com

Alternative system solutions

Pinion			**Axis distance**	**NPS/ NPL/ NPR 025S**	**NP 025S**	**NPSK/ NPLK/ NPRK 025S**	**NPK 025S**	**NVS 050**	**Rack***
Designation	*d* [mm]	*x* [ ]	*A* [mm]	F_{2T} [N]	F_{2T} [N]	F_{2T} [N]	F_{2T} [N]	F_{2T} [N]	Designation
RMK 200-222-22L1-022-020	46.686	0.2	45.743	3220	2350	3220	2340	3530	ZST 200-221-1000-R1
RMK 200-222-22L1-022-029 [1]	46.686	0.2	45.743	2850	2020	2850	2020	3530	ZST 200-221-1000-R1
RMS 200-323-18L1-022	38.197	0.4	41.899	3430	–	3430	–	–	ZST 200-221-1000-R1
RMS 200-323-20L1-022	42.441	0.4	44.021	3250	–	3250	–	–	ZST 200-221-1000-R1
RMS 200-323-22L1-022	46.686	0.4	46.143	3220	–	3220	–	–	ZST 200-221-1000-R1

[1] without protruding contour at the pinion end
d = Pitch circle diameter
x = Addendum modification coefficient
A = Distance between pinion axle and rear surface of rack
F_{2T} = Maximum feed force depending on ratio and number of stages
Application-specific dimensioning with cymex® – www.wittenstein-cymex.com
* Other length options available

Motor shaft diameter [mm]

1-stage

up to 19 [4] (E) clamping hub diameters

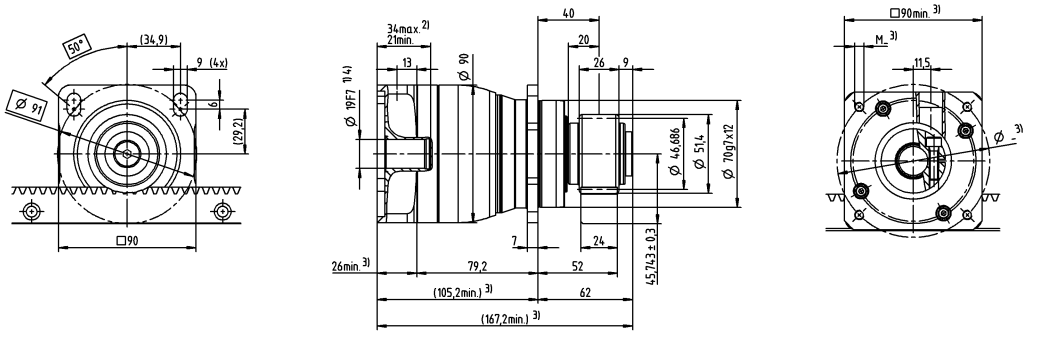

up to 28 [4] (H) clamping hub diameters

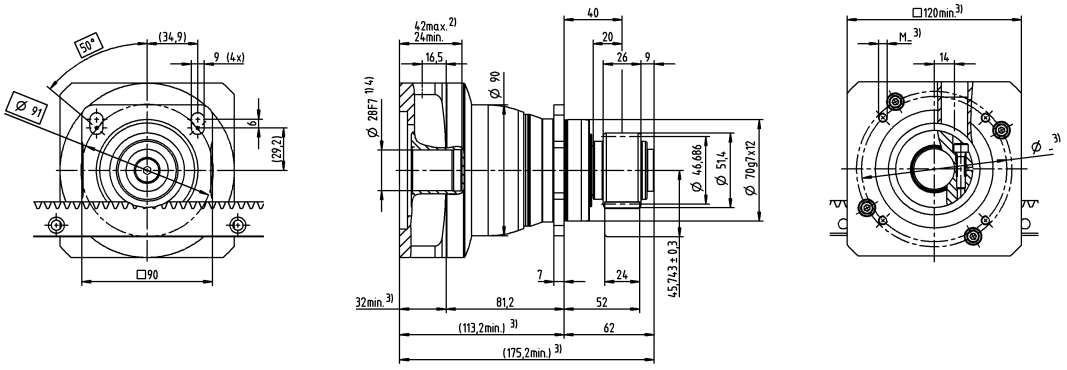

2-stage

up to 14 [4] (C) clamping hub diameters

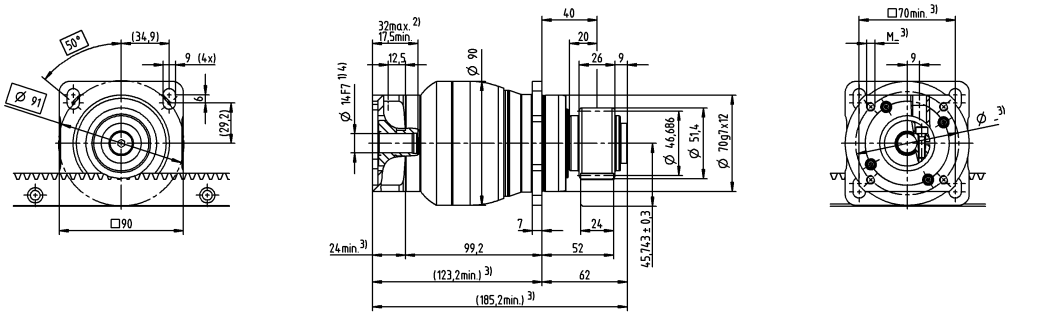

up to 19 [4] (E) clamping hub diameters

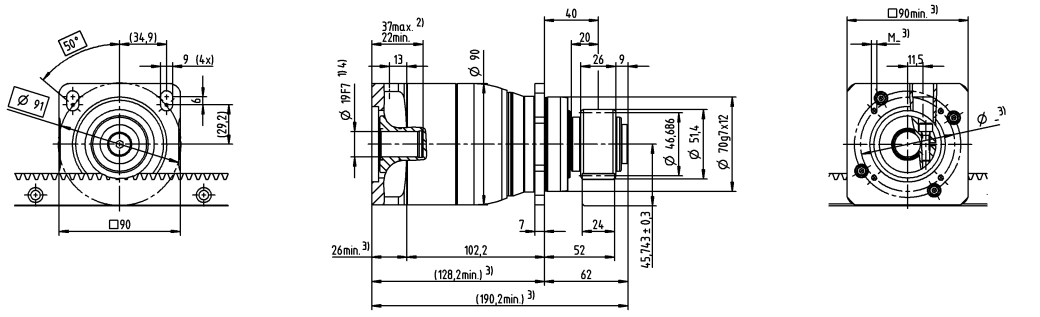

Non-tolerated dimensions are nominal dimensions
Detailed rack dimensions starting on page 161

1) Check motor shaft fit
2) Min./Max. permissible motor shaft length. Longer motor shafts are possible, please contact alpha.
3) The dimensions depend on the motor
4) Smaller motor shaft diameter is compensated by a bushing with a minimum thickness of 1 mm

Planetary gearbox NPR 035 MF with rack module 2 and pinion RMK module 2

System	Max. feed force [1] F_{2T}		4300 N	
	Max. feed speed [2] v_{max}		347 m/min	135 m/min
Gearbox	No. of stages		1	2
	Ratios *i*		3 / 4 / 5 / 7 / 8 / 10	9 / 12 / 15 / 16 / 20 / 25 / 28 / 30 / 32 / 35 / 40 / 50 / 64 / 70 / 100
	Clamping hub diameter		19 / 24 / 28 / 32 / 38 mm	14 / 16 / 19 / 24 / 28 mm
	Designation		NPR 035S-MF1-_ _ _-1_ _	NPR 035S-MF2-_ _ _-1_ _
Pinion	Module *m*		2 mm	
	Number of teeth *z*		26	
	Pitch circle diameter *d*		55.174 mm	
	Profile correction factor *x*		0	
	Helix angle *ß*		-19.5283° (left-handed)	
	Designation		RMK 200-222-26L1-032-021	
Rack	Module *m*		2 mm	
	Length L (options)		1000 mm (2000 mm; 500 mm)	
	Helix angle *ß*		19.5283° (right-handed)	
	Designation		ZST 200-221-1000-R1	
Lubrication system [3]	Set consisting of lubrication pinion and axis for	Rack	LMT 200-PU -18L1-024-1	
		Pinion	LMT 200-PU -18R1-024-1	
	Lubricator	125 cm³	LUC+125-0511-02	
		400 cm³	LUC+400-0511-02	
	Lubricant		WITTENSTEIN alpha G11	

[1] Maximum feed force depending on ratio and number of stages
[2] Calculation with lowest ratio and maximum input speed
[3] Impulse-controlled basic version with one output and 2 m hose. See page 118 for further information on the lubrication system.
Application-specific dimensioning with cymex® – www.wittenstein-cymex.com

Alternative system solutions

Pinion			**Axis distance**	**NPS/ NPL/ NPR 035S**	**NP 035S**	**NPSK/ NPLK/ NPRK 035S**	**NPK 035S**	**NVS 063**	**Rack***
Designation	*d* [mm]	*x* [ ]	*A* [mm]	F_{2T} [N]	F_{2T} [N]	F_{2T} [N]	F_{2T} [N]	F_{2T} [N]	Designation
RMK 200-222-26L1-032-021	55.174	0	49.587	4300	4300	4300	4300	4300	ZST 200-221-1000-R1
RMK 200-222-26L1-032-053 [1]	55.174	0	49.587	4250	3340	4250	3340	4300	ZST 200-221-1000-R2
RMS 200-323-23L1-032	48.808	0.4	47.204	4300	–	4300	–	–	ZST 200-221-1000-R1
RMS 200-323-25L1-032	53.052	0.4	49.326	4300	–	4300	–	–	ZST 200-221-1000-R1
RMS 200-323-27L1-032	57.296	0.3	51.248	4300	–	4300	–	–	ZST 200-221-1000-R1

[1] without protruding contour at the pinion end
d = Pitch circle diameter
x = Addendum modification coefficient
A = Distance between pinion axle and rear surface of rack
F_{2T} = Maximum feed force depending on ratio and number of stages
Application-specific dimensioning with cymex® – www.wittenstein-cymex.com
* Other length options available

Motor shaft diameter [mm]

1-stage

up to 28 [4] (H) clamping hub diameters

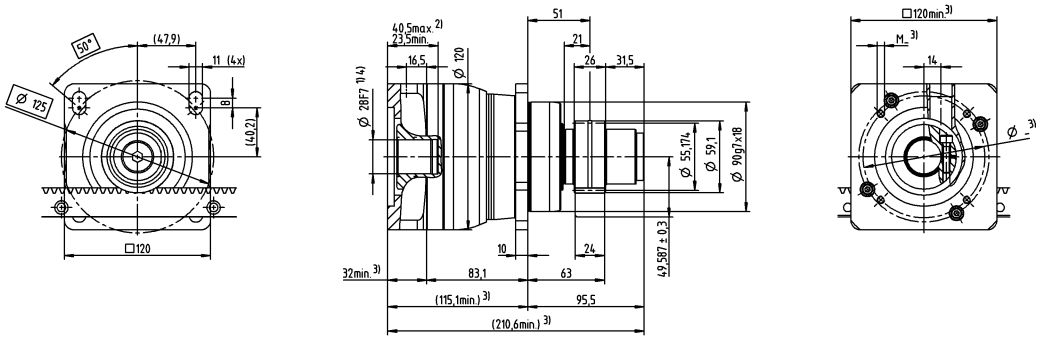

up to 38 [4] (K) clamping hub diameters

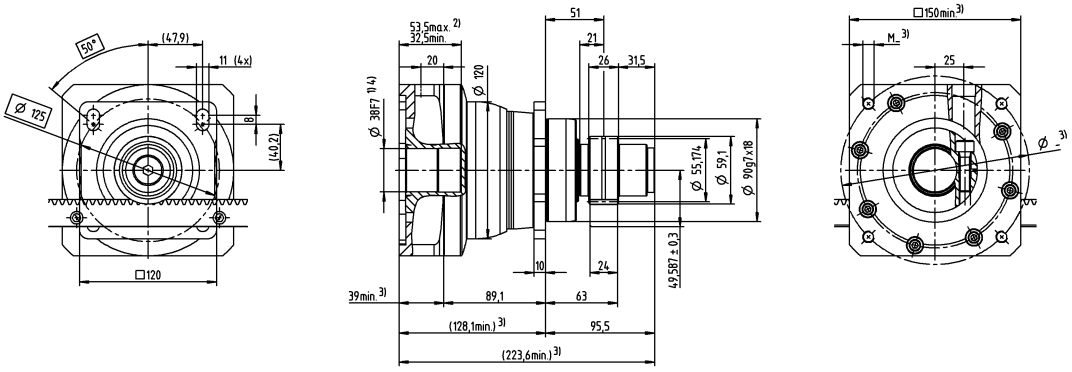

2-stage

up to 19 [4] (E) clamping hub diameters

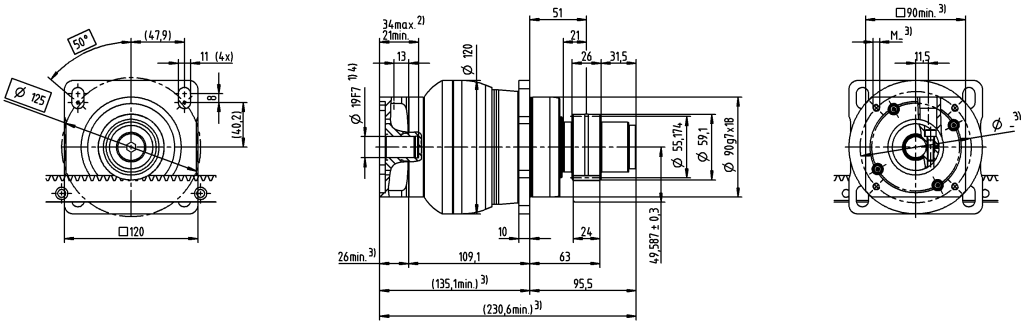

up to 28 [4] (H) clamping hub diameters

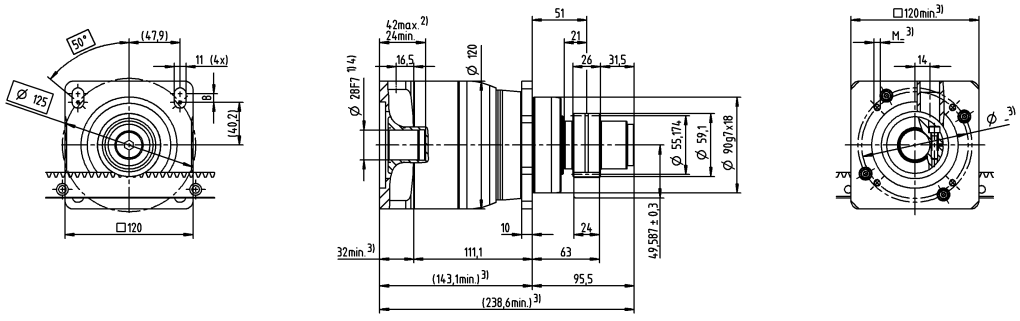

Non-tolerated dimensions are nominal dimensions
Detailed rack dimensions starting on page 161

1) Check motor shaft fit
2) Min./Max. permissible motor shaft length. Longer motor shafts are possible, please contact alpha.
3) The dimensions depend on the motor
4) Smaller motor shaft diameter is compensated by a bushing with a minimum thickness of 1 mm

Value Linear System VLS 6 with NPR

Planetary gearbox NPR 035 MF with rack module 3 and pinion RMS module 3

System	Max. feed force [1] F_{2T}		6150 N	
	Max. feed speed [2] v_{max}		400 m/min	156 m/min
Gearbox	No. of stages		1	2
	Ratios *i*		3 / 4 / 5 / 7 / 8 / 10	9 /12 / 15 / 16 / 20 / 25 / 28 / 30 / 32 / 35 / 40 / 50 / 64 / 70 / 100
	Clamping hub diameter		19 / 24 / 28 / 32 / 38 mm	14 / 16 / 19 / 24 / 28 mm
	Designation		NPR 035S-MF1-_ _ _-2_ _	NPR 035S-MF2-_ _ _-2_ _
Pinion	Module *m*		3 mm	
	Number of teeth *z*		20	
	Pitch circle diameter *d*		63.662 mm	
	Profile correction factor *x*		0.4	
	Helix angle *ß*		-19.5283° (left-handed)	
	Designation		RMS 300-323-20L1-032	
Rack	Module *m*		3 mm	
	Length L (options)		1000 mm (2000 mm; 500 mm)	
	Helix angle *ß*		19.5283° (right-handed)	
	Designation		ZST 300-221-1000-R1	
Lubrication system [3]	Set consisting of lubrication pinion and axis for	Rack	LMT 300-PU -18L1-030-1	
		Pinion	LMT 300-PU -18R1-030-1	
	Lubricator	125 cm^3	LUC+125-0511-02	
		400 cm^3	LUC+400-0511-02	
	Lubricant		WITTENSTEIN alpha G11	

[1] Maximum feed force depending on ratio and number of stages
[2] Calculation with lowest ratio and maximum input speed
[3] Impulse-controlled basic version with one output and 2 m hose. See page 118 for further information on the lubrication system.
Application-specific dimensioning with cymex® – www.wittenstein-cymex.com

Alternative system solutions

Pinion			**Axis distance**	**NPS/ NPL/ NPR 035S**	**NP 035S**	**NPS/ NPL/ NPR 035S**	**NP 035S**	**Rack***
Designation	*d* [mm]	*x* [ ]	*A* [mm]	F_{2T} [N]	F_{2T} [N]	F_{2T} [N]	F_{2T} [N]	Designation
RMK 200-222-26L1-032-021	55.174	0	49.587	4300	4300	4300	4300	ZST 200-221-1000-R1
RMS 200-323-23L1-032	48.808	0.4	47.204	4300	–	4300	–	ZST 200-221-1000-R1
RMS 200-323-25L1-032	53.052	0.4	49.326	4300	–	4300	–	ZST 200-221-1000-R1
RMS 200-323-27L1-032	57.296	0.3	51.248	4300	–	4300	–	ZST 200-221-1000-R1
RMS 300-323-20L1-032	63.662	0.4	59.031	6150	–	6150	–	ZST 300-221-1000-R1

d = Pitch circle diameter
x = Addendum modification coefficient
A = Distance between pinion axle and rear surface of rack
F_{2T} = Maximum feed force depending on ratio and number of stages
Application-specific dimensioning with cymex® – www.wittenstein-cymex.com
* Other length options available

Motor shaft diameter [mm]

1-stage

up to 28 [4] (H) clamping hub diameters

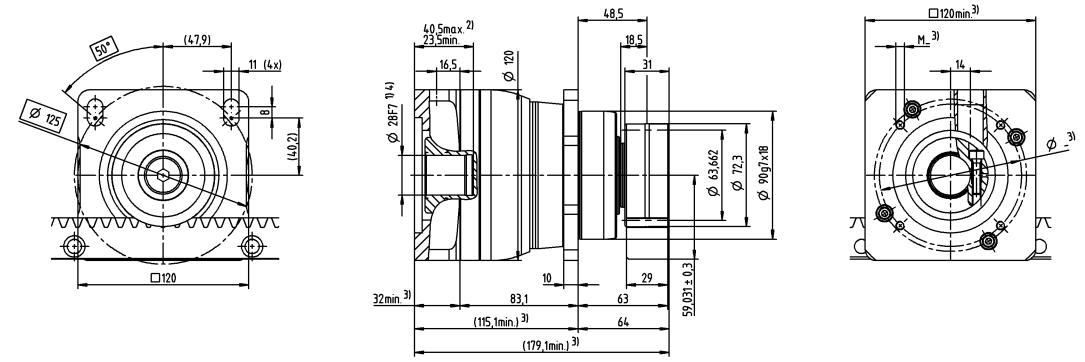

up to 38 [4] (K) clamping hub diameters

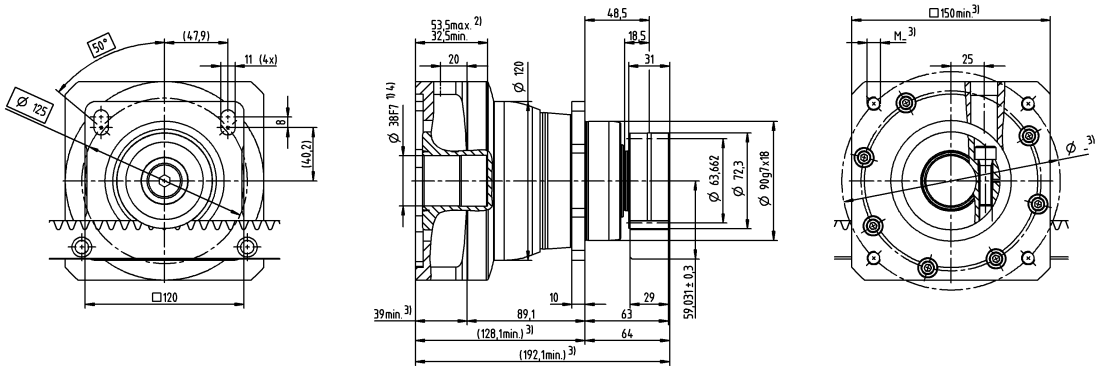

2-stage

up to 19 [4] (E) clamping hub diameters

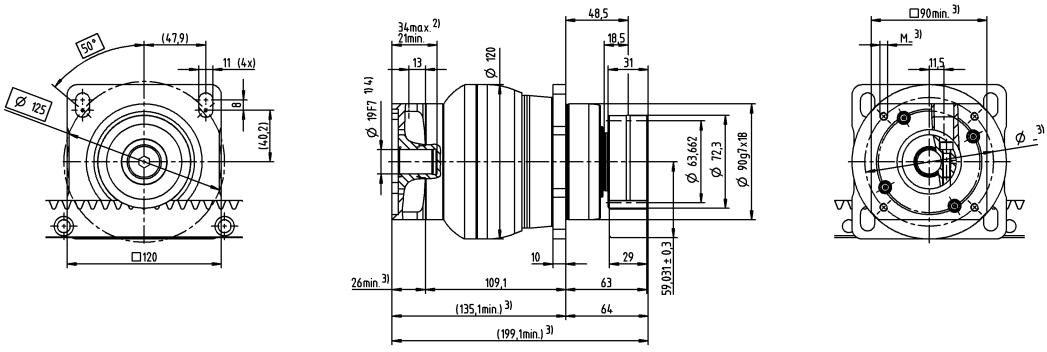

up to 28 [4] (H) clamping hub diameters

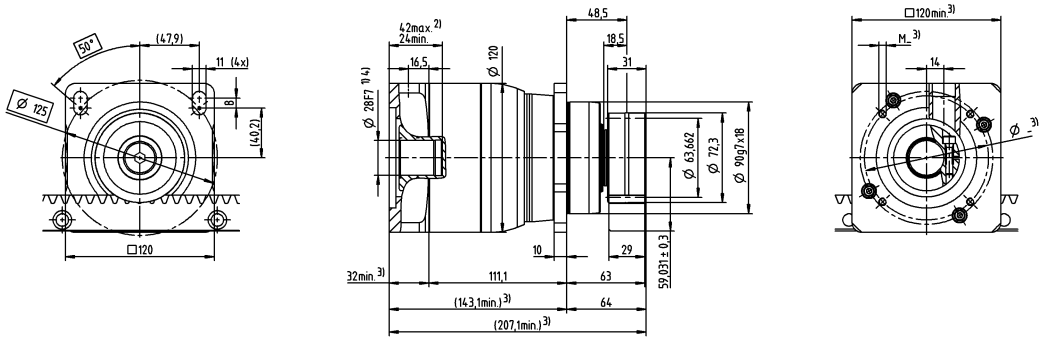

Non-tolerated dimensions are nominal dimensions
Detailed rack dimensions starting on page 161

[1] Check motor shaft fit
[2] Min./Max. permissible motor shaft length. Longer motor shafts are possible, please contact alpha.
[3] The dimensions depend on the motor
[4] Smaller motor shaft diameter is compensated by a bushing with a minimum thickness of 1 mm

Planetary gearbox NPR 045 MF with rack module 3 and pinion RMS module 3

System	Max. feed force [1] F_{2T}		8000 N	
	Max. feed speed [2] v_{max}		160 m/min	48 m/min
Gearbox	No. of stages		1	2
	Ratios *i*		5 / 8 / 10	25 / 32 / 50 / 64 / 100
	Clamping hub diameter		38 mm	19 / 24 / 28 / 32 / 38 mm
	Designation		NPR 045S-MF1-_ _ _-2_ _	NPR 045S-MF2-_ _ _-2_ _
Pinion	Module *m*		3 mm	
	Number of teeth *z*		20	
	Pitch circle diameter *d*		63.662 mm	
	Profile correction factor *x*		0.4	
	Helix angle *ß*		-19.5283° (left-handed)	
	Designation		RMS 300-323-20L1-040	
Rack	Module *m*		3 mm	
	Length L (options)		1000 mm (2000 mm; 500 mm)	
	Helix angle *ß*		19.5283° (right-handed)	
	Designation		ZST 300-221-1000-R1	
Lubrication system [3]	Set consisting of lubrication pinion and axis for	Rack	LMT 300-PU -18L1-030-1	
		Pinion	LMT 300-PU -18R1-030-1	
	Lubricator	125 cm^3	LUC+125-0511-02	
		400 cm^3	LUC+400-0511-02	
	Lubricant		WITTENSTEIN alpha G11	

[1] Maximum feed force depending on ratio and number of stages
[2] Calculation with lowest ratio and maximum input speed
[3] Impulse-controlled basic version with one output and 2 m hose. See page 118 for further information on the lubrication system.
Application-specific dimensioning with cymex® – www.wittenstein-cymex.com

Alternative system solutions

Pinion			**Axis distance**	**NPS/ NPL/ NPR 045S**	**NP 045S**	**NPSK/ NPLK/ NPRK 045S**	**NPK 045S**	**Rack***
Designation	*d* [mm]	*x* [ ]	*A* [mm]	F_{2T} [N]	F_{2T} [N]	F_{2T} [N]	F_{2T} [N]	Designation
RMK 300-222-24L1-040-035	76.394	0	64.197	8000	7450	8000	7450	ZST 300-221-1000-R1
RMS 300-323-20L1-040	63.662	0.4	59.031	8000	–	8000	–	ZST 300-221-1000-R1
RMS 300-323-22L1-040	70.028	0.4	62.214	8000	–	8000	–	ZST 300-221-1000-R1
RMS 300-323-24L1-040	76.394	0.4	65.397	8000	–	8000	–	ZST 300-221-1000-R1

d = Pitch circle diameter
x = Addendum modification coefficient
A = Distance between pinion axle and rear surface of rack
F_{2T} = Maximum feed force depending on ratio and number of stages
Application-specific dimensioning with cymex® – www.wittenstein-cymex.com
* Other length options available

Motor shaft diameter [mm]

1-stage

up to 38 [4] (K) clamping hub diameters

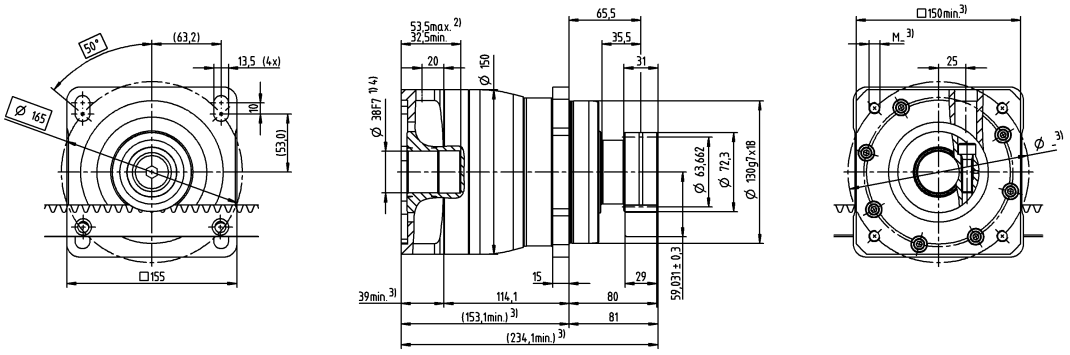

up to 28 [4] (H) clamping hub diameters

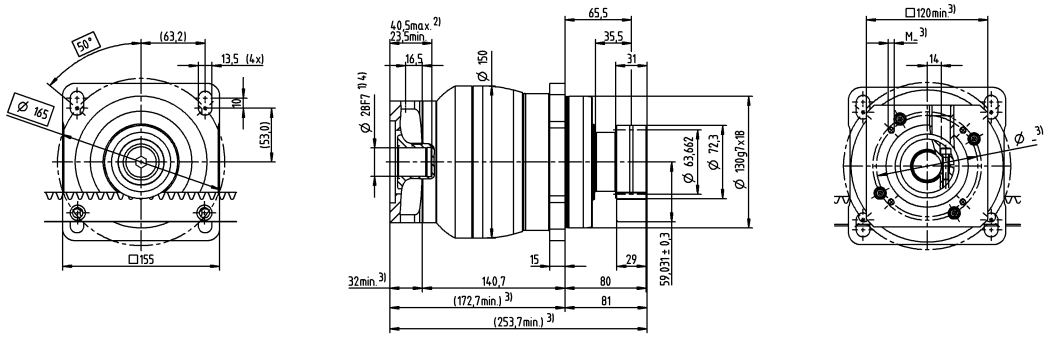

2-stage

up to 38 [4] (K) clamping hub diameters

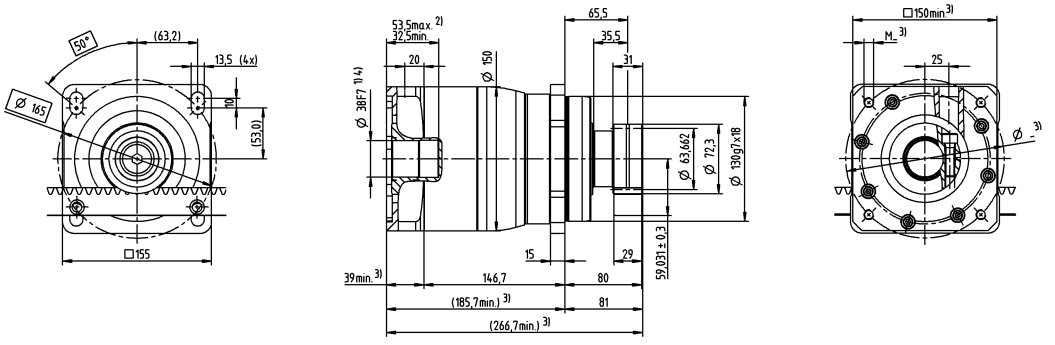

Non-tolerated dimensions are nominal dimensions
Detailed rack dimensions starting on page 161

[1] Check motor shaft fit
[2] Min./Max. permissible motor shaft length. Longer motor shafts are possible, please contact alpha.
[3] The dimensions depend on the motor
[4] Smaller motor shaft diameter is compensated by a bushing with a minimum thickness of 1 mm

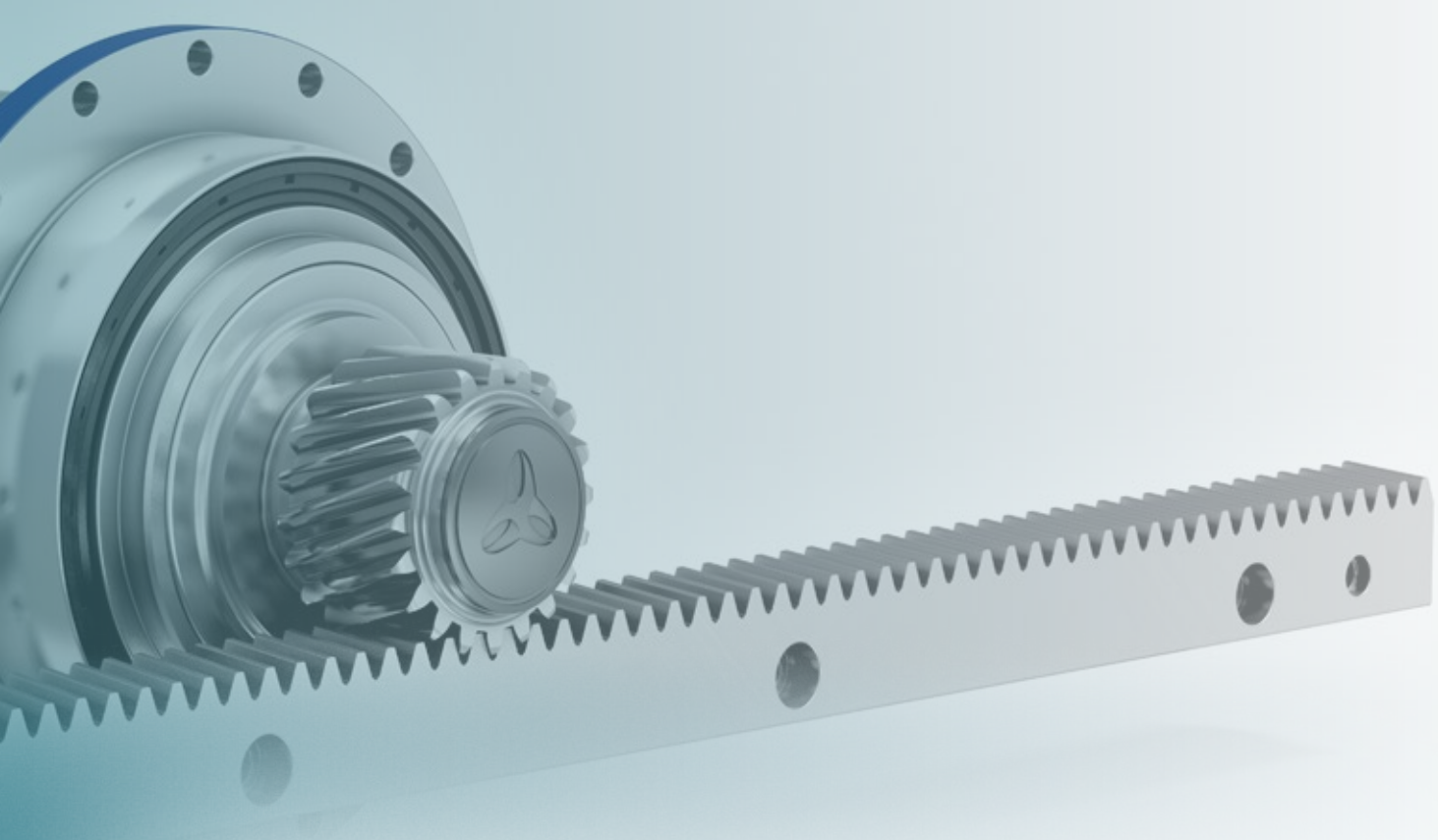

Advanced Linear Systems from WITTENSTEIN alpha – outstanding performance in the Advanced Segment

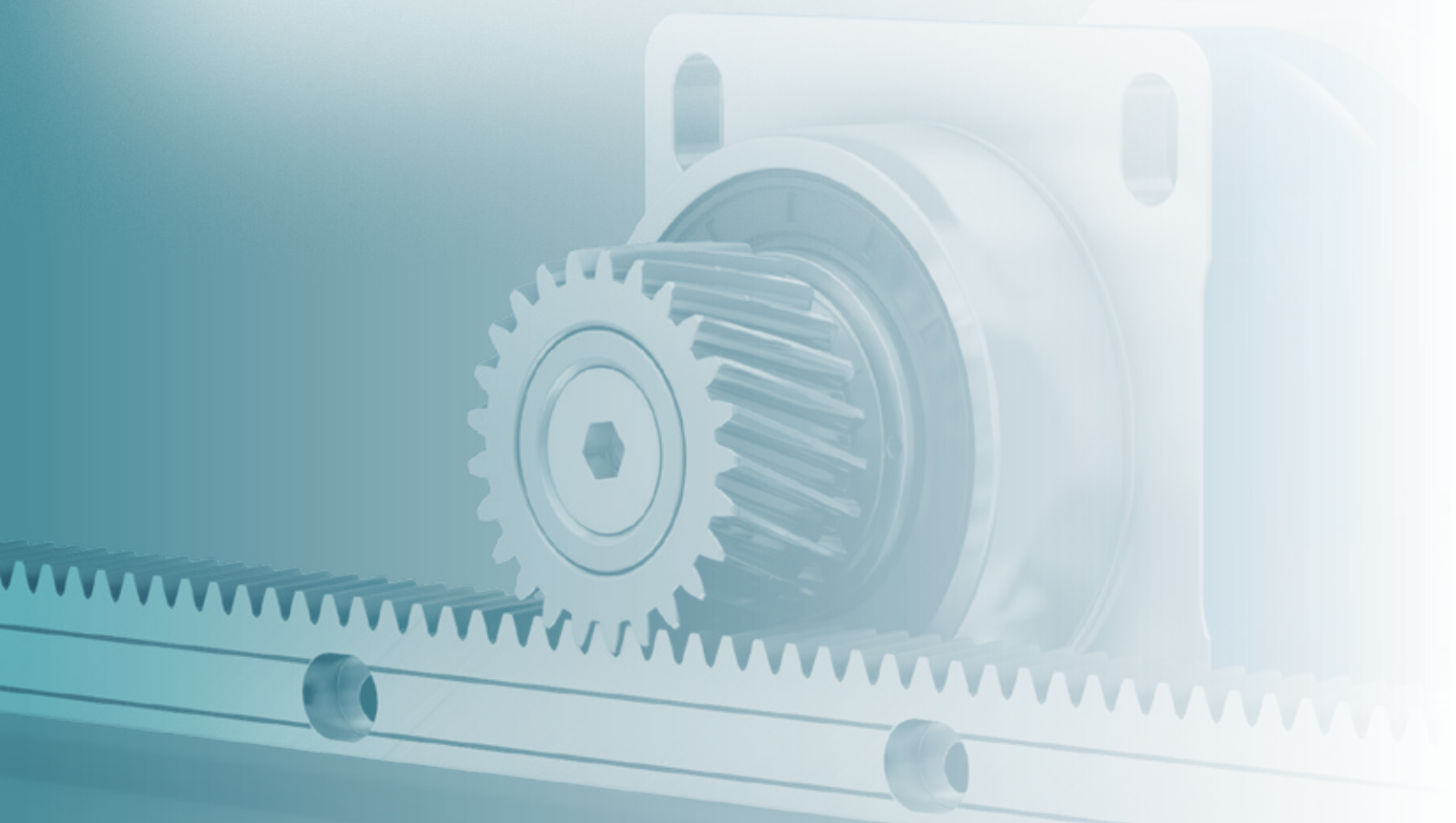

Advanced Linear Systems – the perfect solution for linear feed drives for almost every automation, wood working and machine tool application

The Advanced Linear System with **SP+** and associated right-angle versions is used predominantly as a single drive within a range of up to 12,500 N/drive.

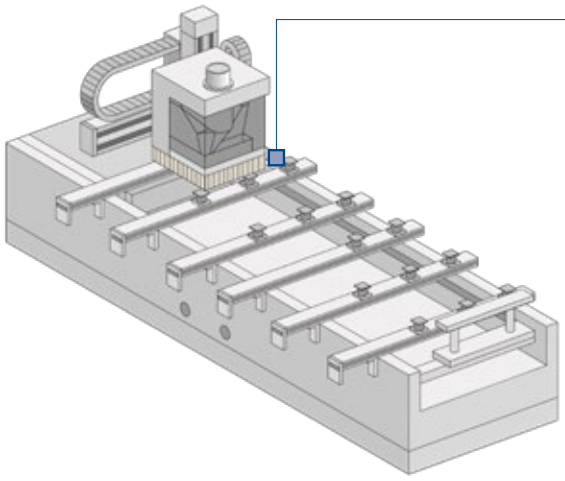

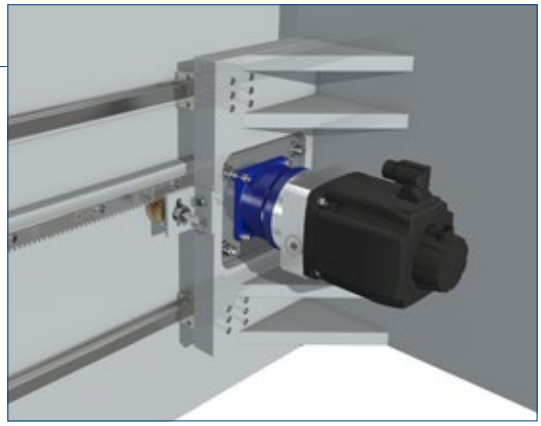

Wood working machine

The Advanced Linear System with **TP+** or **TP+ HIGH TORQUE** and associated right-angle versions is used as a single drive or master/slave drive within a range of up to 21,000 N/drive.

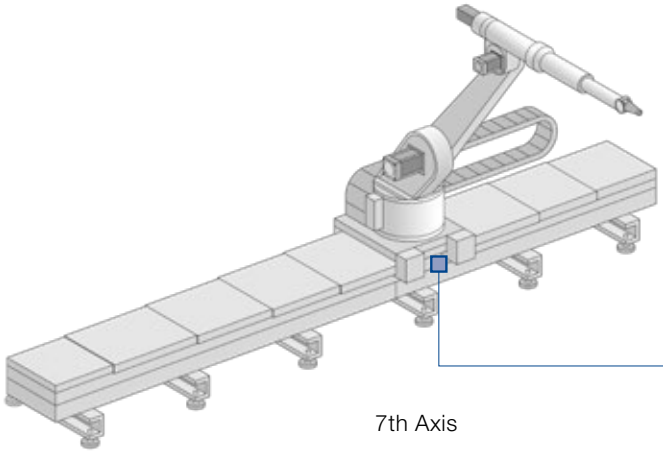

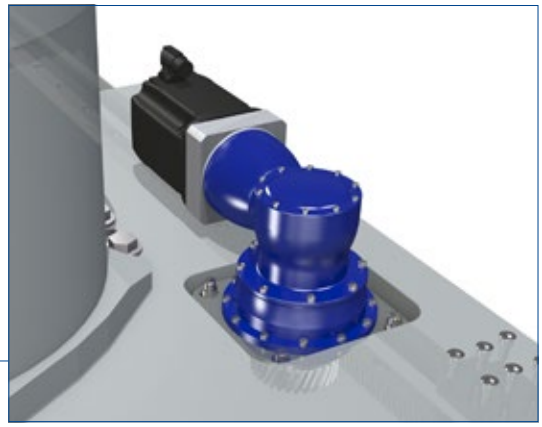

7th Axis

Outstanding performance in the Advanced Segment

These systems are adapted to applications with average to high demands in terms of smooth running, positioning accuracy and feed force. Different gearbox versions and options such as HIGH TORQUE or HIGH SPEED can be selected to choose the best system for the application.

Your benefits

- **Perfectly adapted linear systems available with planetary, right-angle and worm gearboxes or as an servo actuator**
- **Optionally with INIRA®**
- **Large individual configuration range due to numerous pinion/gearbox combinations**

		Advanced Linear System	Max. feed force [N]	Max. feed speed [m/min]
with SP+		ALS 2	2230	250
		ALS 3	3250	300
		ALS 6	6040	281
		ALS 8	8600	333
		ALS 12	12500	400
with TP+	MF	ALS 1	1370	325
		ALS 2	2500	412
		ALS 3	3600	367
		ALS 12	11800	438
		ALS 20	19700	570
	MA	ALS 4	4200	45
		ALS 11	10900	57
		ALS 21	21000	68

Feed force and feed speed dependent on ratio



SP+



TP+ MF



TP+ MA

Quick system selection

SP+ | TP+ MF | TP+ MA

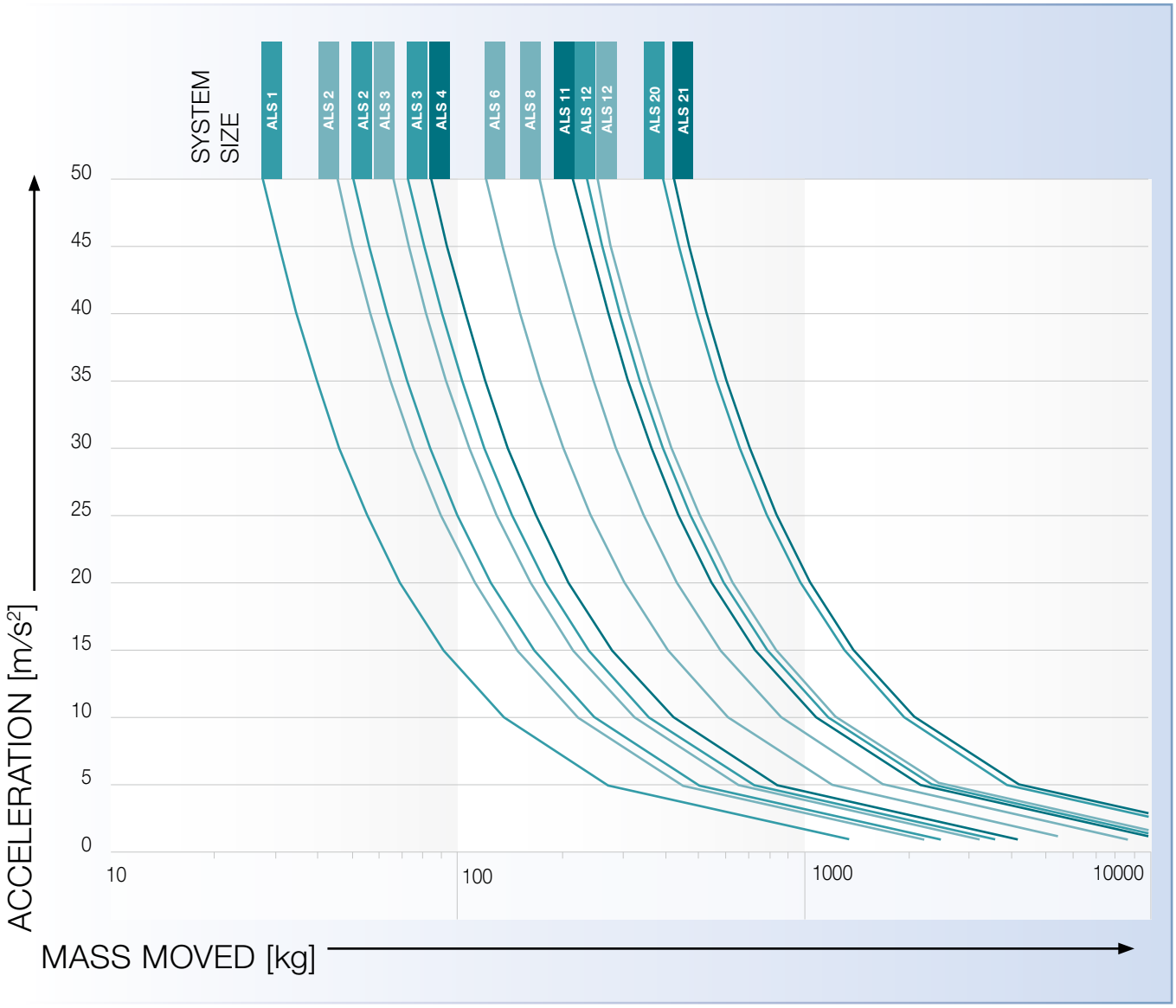

Advanced Linear Systems overview

Our preferred linear systems are always comprised of the perfect combination of gearbox, pinion, rack and lubrication system. The systems are optimized to achieve the required feed force, feed speed, rigidity and degree of utilization of the individual components. Depending on your individual requirements, you have the option to further configure products via the ordering code. For a detailed dimensioning and configuration of the products we recommend to use cymex® 5.

System	Gearbox	Pinion	Rack*
ALS 2	SP+ 060R	RMS 200-323-15L1-016	ZST 200-332-1000-R1
ALS 3	SP+ 075R	RMS 200-323-18L1-022	ZST 200-332-1000-R1
ALS 6	SP+ 100R	RMS 200-323-23L1-032	ZST 200-333-1000-R1
ALS 8	SP+ 140R	RMS 300-323-20L1-040	ZST 300-332-1000-R1
ALS 12	SP+ 180	RMS 400-323-20L1-055	ZST 400-332-1000-R1
ALS 1	TP+ 004 MF	RMF 200-443-26L1-031-8xM5	ZST 200-332-1000-R1
ALS 2	TP+ 010 MF	RMF 200-443-33L1-050-8xM6	ZST 200-332-1000-R1
ALS 3	TP+ 025 MF	RMF 200-443-40L1-063-12xM6	ZST 200-332-1000-R1
ALS 12	TP+ 050 MF	RMF 300-443-35L1-080-12xM8	ZST 300-333-1000-R1
ALS 20	TP+ 110 MF	RMF 400-443-38L1-125-12xM10	ZST 400-334-1000-R11
ALS 4	TP+ 025 MA	RMW 200-444-20L1-037	ZST 200-332-1000-R1
ALS 11	TP+ 050 MA	RMW 300-444-20L1-055	ZST 300-333-1000-R1
ALS 21	TP+ 110 MA	RMW 400-444-20L1-073	ZST 400-334-1000-R11

* Other length options available

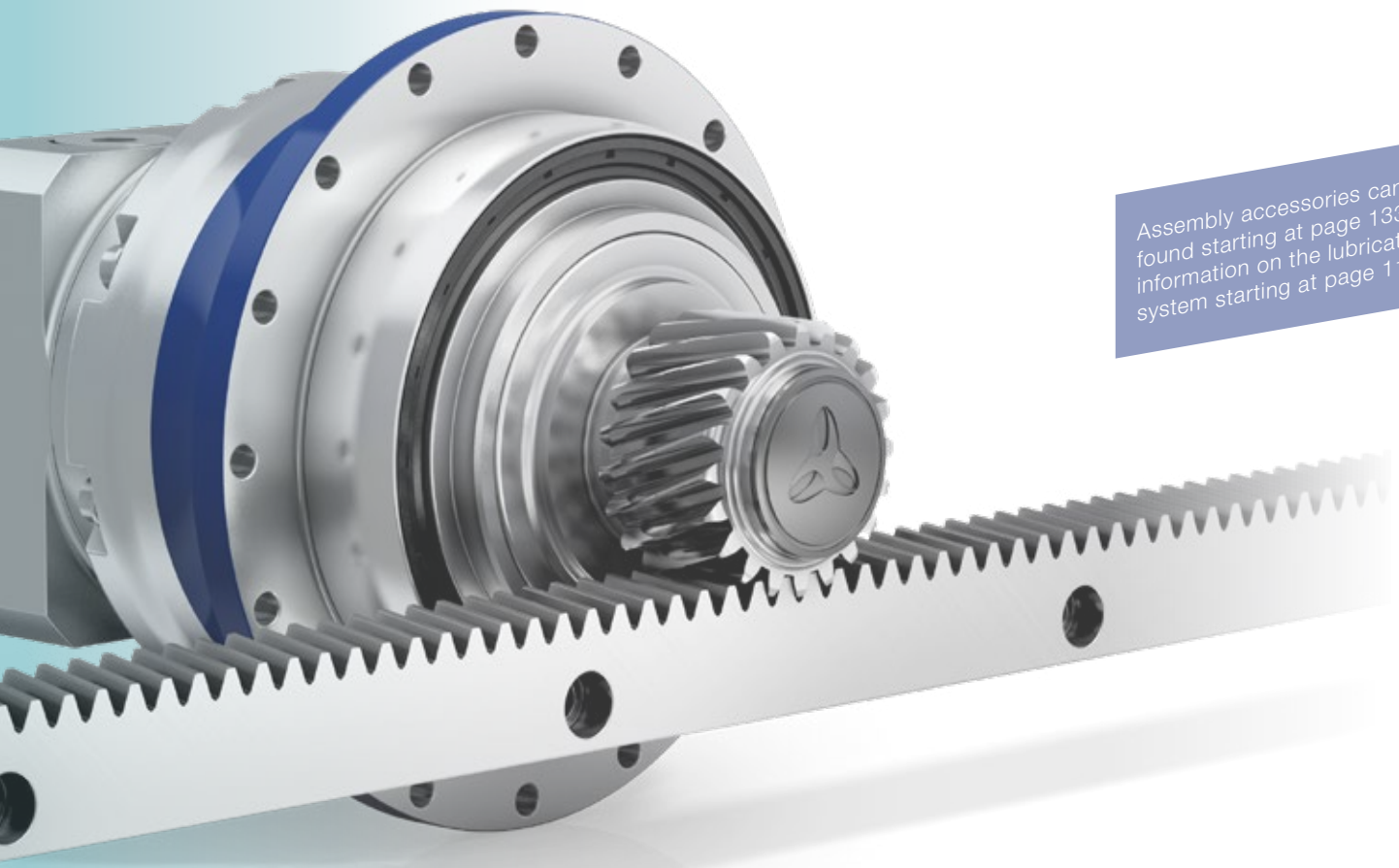

Assembly accessories can be found starting at page 133 and information on the lubrication system starting at page 118

Ordering code

Gearbox*

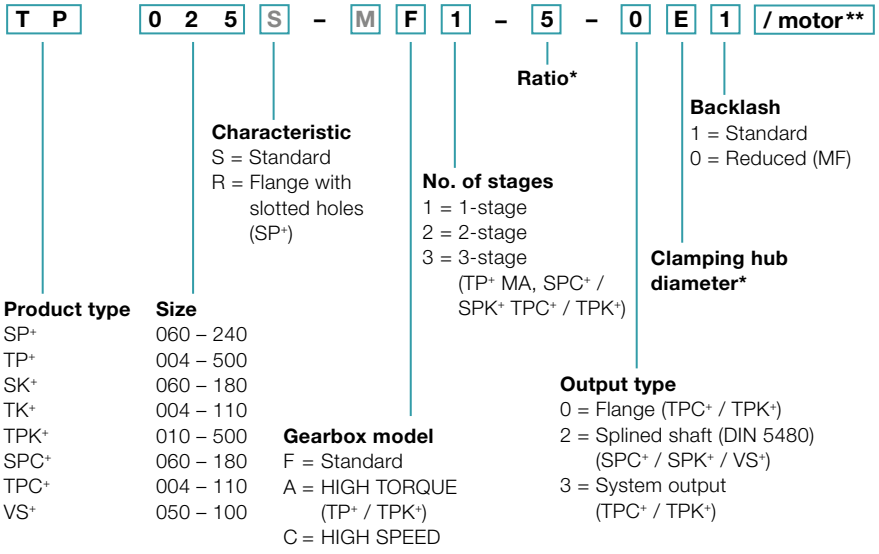

M Components with a gray font cannot be selected

* Further information on the gearboxs can be obtained from the respective catalogs, online at www.wittenstein-alpha.com or on request

** Full motor designation only required for determining gearbox mounting parts

Rack

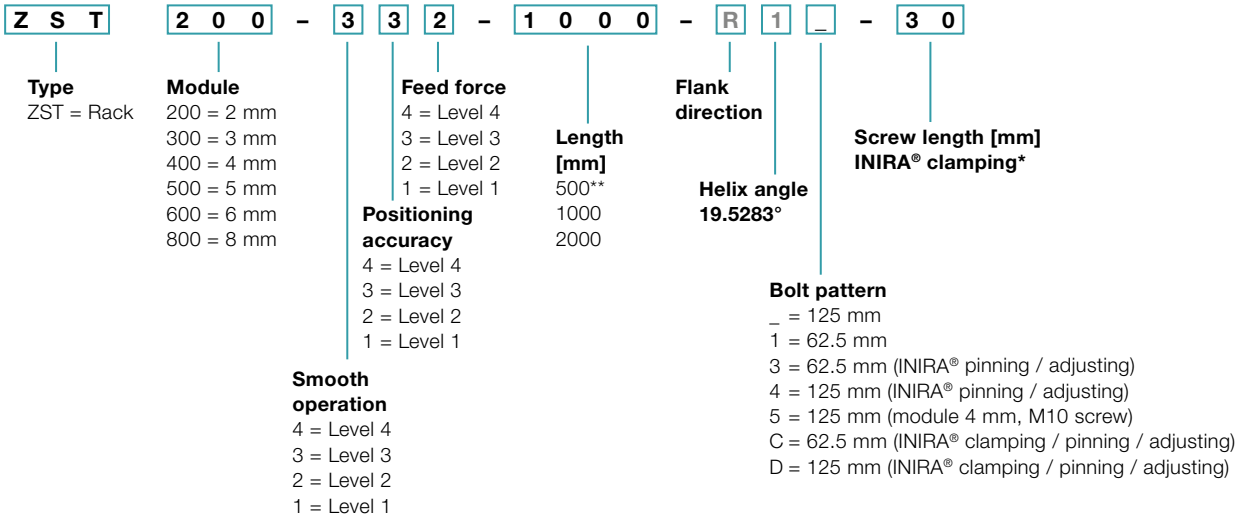

* Please refer to page 134 for an overview of available screw lengths

* Module 4, 493 mm

Pinion

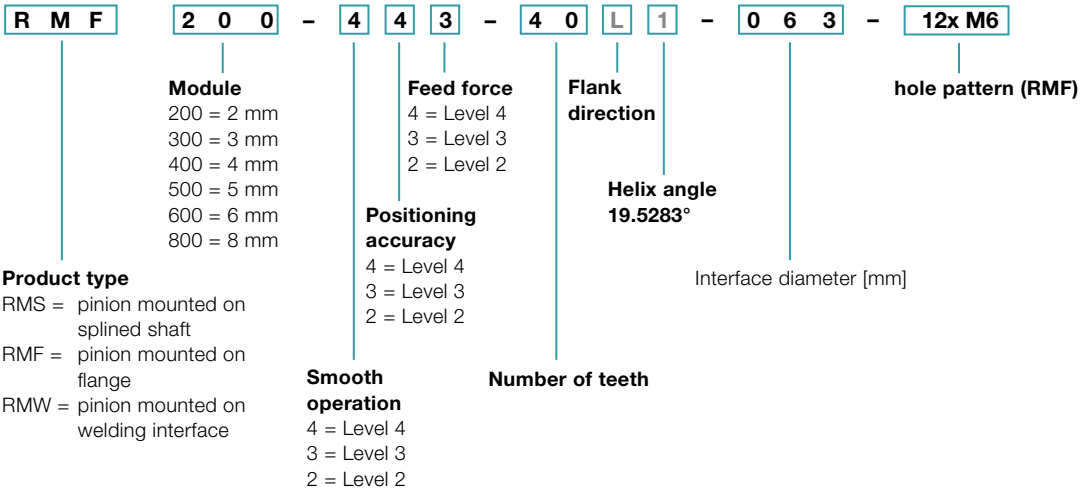

Planetary gearbox SP+ 060R MF with rack module 2 and pinion RMS module 2

System	Max. feed force [1] F_{2T}		2230 N	
	Max. feed speed [2] v_{max}		250 m/min	53 m/min
Gearbox	No. of stages		1	2
	Ratios *i*		3 / 4 / 5 / 7 / 8 / 10	16 / 20 / 25 / 28 / 32 / 35 / 40 / 50 / 64 / 70 / 100
	Clamping hub diameter		11 / 14 / 19 mm	11 / 14 mm
	Designation		SP 060R-MF1-_ _ _-2_ _	SP 060R-MF2-_ _ _-2_ _
Pinion	Module *m*		2 mm	
	Number of teeth *z*		15	
	Pitch circle diameter *d*		31.831 mm	
	Profile correction factor *x*		0.5	
	Helix angle *ß*		-19.5283° (left-handed)	
	Designation		RMS 200-323-15L1-016	
Rack	Module *m*		2 mm	
	Length L (options)		1000 mm (2000 mm; 500 mm)	
	Helix angle *ß*		19.5283° (right-handed)	
	Designation		ZST 200-332-1000-R1; optionally with INIRA®	
Lubrication system [3]	Set consisting of lubrication pinion and axis for	Rack	LMT 200-PU -18L1-024-1	
		Pinion	LMT 200-PU -18R1-024-1	
	Lubricator	125 cm³	LUC+125-0511-02	
		400 cm³	LUC+400-0511-02	
	Lubricant		WITTENSTEIN alpha G11	

[1] Maximum feed force depending on ratio and number of stages
[2] Calculation with lowest ratio and maximum input speed
[3] Impulse-controlled basic version with one output and 2 m hose. See page 118 for further information on the lubrication system.
Application-specific dimensioning with cymex® – www.wittenstein-cymex.com

Alternative system solutions

Pinion			**Axis distance**	**SP+ 060R**	**PBG 1**	**SK+ 060S**	**SPC+ 060S**	**Rack***
Designation	*d* [mm]	*x* [ ]	*A* [mm]	F_{2T} [N]	F_{2T} [N]	F_{2T} [N]	F_{2T} [N]	Designation
RMK 200-222-18L1-016-019	38.197	0.4	41.899	2210	2210	1870	2210	ZST 200-332-1000-R1; optionally with INIRA®
RMS 200-323-15L1-016	31.831	0.5	38.916	2230	2230	2180	2230	ZST 200-332-1000-R1; optionally with INIRA®
RMS 200-323-16L1-016	33.953	0.5	39.977	2230	2230	2080	2230	ZST 200-332-1000-R1; optionally with INIRA®
RMS 200-323-18L1-016	38.197	0.4	41.899	2210	2210	1870	2210	ZST 200-332-1000-R1; optionally with INIRA®

d = Pitch circle diameter
x = Addendum modification coefficient
A = Distance between pinion axle and rear surface of rack
F_{2T} = Maximum feed force depending on ratio and number of stages
Application-specific dimensioning with cymex® – www.wittenstein-cymex.com
* Other length options available

Motor shaft diameter [mm]

1-stage

greater than 11 (B) up to 14 [4] (C) clamping hub diameters

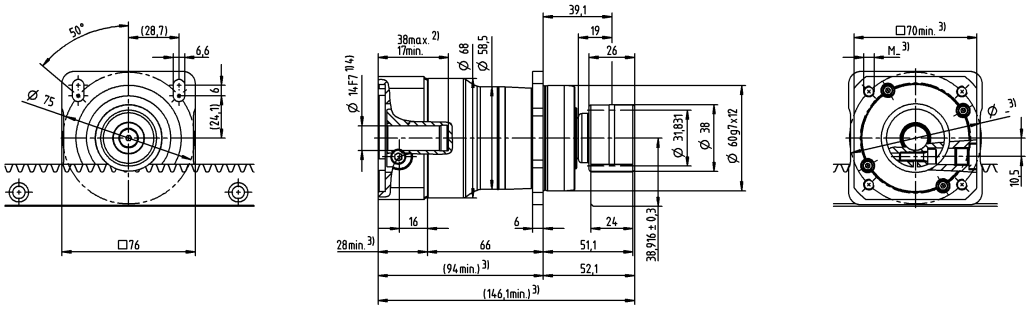

up to 19 [4] (E) clamping hub diameters

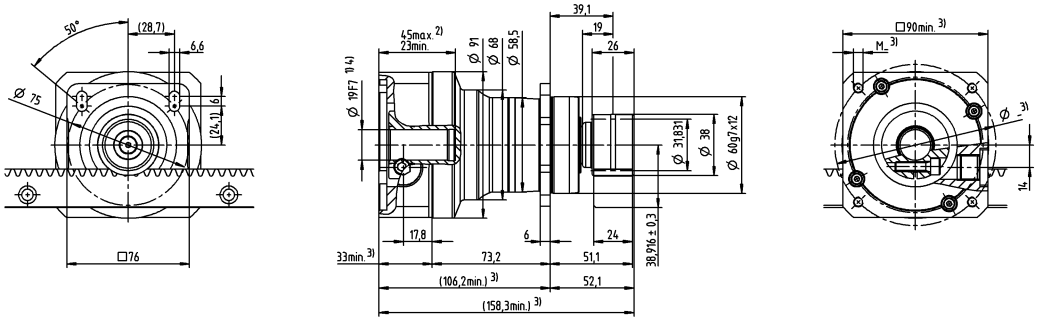

2-stage

up to 11 [4] (B) clamping hub diameters

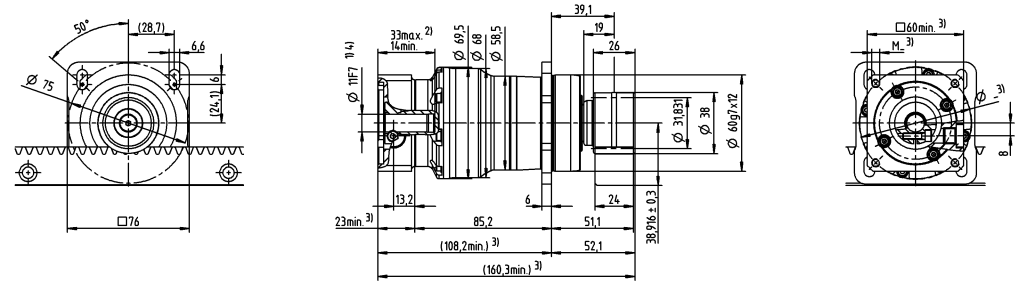

up to 14 [4] (C) clamping hub diameters

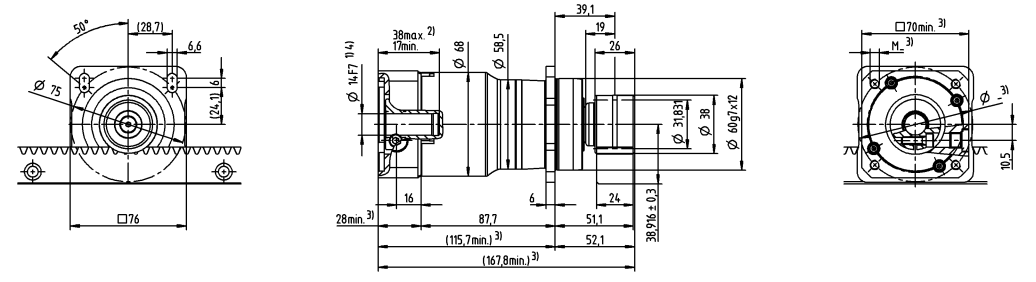

Non-tolerated dimensions are nominal dimensions
Detailed rack dimensions starting on page 161

[1] Check motor shaft fit
[2] Min./Max. permissible motor shaft length. Longer motor shafts are possible, please contact alpha.
[3] The dimensions depend on the motor
[4] Smaller motor shaft diameter is compensated by a bushing with a minimum thickness of 1 mm

Planetary gearbox SP+ 075R MF with rack module 2 and pinion RMS module 2

System	Max. feed force [1] F_{2T}		3250 N	
	Max. feed speed [2] v_{max}		300 m/min	64 m/min
Gearbox	No. of stages		1	2
	Ratios *i*		3 / 4 / 5 / 7 / 8 / 10	16 / 20 / 25 / 28 / 32 / 35 / 40 / 50 / 64 / 70 / 100
	Clamping hub diameter		14 / 19 / 24 mm	11 / 14 / 19 mm
	Designation		SP 075R-MF1-_ _ _-2_ _	SP 075R-MF2-_ _ _-2_ _
Pinion	Module *m*		2 mm	
	Number of teeth *z*		18	
	Pitch circle diameter *d*		38.197 mm	
	Profile correction factor *x*		0.4	
	Helix angle *ß*		-19.5283° (left-handed)	
	Designation		RMS 200-323-18L1-022	
Rack	Module *m*		2 mm	
	Length L (options)		1000 mm (2000 mm; 500 mm)	
	Helix angle *ß*		19.5283° (right-handed)	
	Designation		ZST 200-332-1000-R1; optionally with INIRA®	
Lubrication system [3]	Set consisting of lubrication pinion and axis for	Rack	LMT 200-PU -18L1-024-1	
		Pinion	LMT 200-PU -18R1-024-1	
	Lubricator	125 cm³	LUC+125-0511-02	
		400 cm³	LUC+400-0511-02	
	Lubricant		WITTENSTEIN alpha G11	

[1] Maximum feed force depending on ratio and number of stages
[2] Calculation with lowest ratio and maximum input speed
[3] Impulse-controlled basic version with one output and 2 m hose. See page 118 for further information on the lubrication system.
Application-specific dimensioning with cymex® – www.wittenstein-cymex.com

Alternative system solutions

Pinion			Axis distance	SP+ 075R	PBG 2	SK+ 075S	SPC+ 075S	SPK+ 075S	Rack*
Designation	*d* [mm]	*x* [ ]	*A* [mm]	F_{2T} [N]	F_{2T} [N]	F_{2T} [N]	F_{2T} [N]	F_{2T} [N]	Designation
RMK 200-222-22L1-022-020	46.686	0.2	45.743	3230	3230	3380	3230	3250	ZST 200-332-1000-R1; optionally with INIRA®
RMS 200-323-18L1-022	38.197	0.4	41.899	3250	3250	3390	3250	3280	ZST 200-332-1000-R1; optionally with INIRA®
RMS 200-323-20L1-022	42.441	0.4	44.021	3240	3240	3400	3250	3280	ZST 200-332-1000-R1; optionally with INIRA®
RMS 200-323-22L1-022	46.686	0.4	46.143	3230	3230	3380	3230	3250	ZST 200-332-1000-R1; optionally with INIRA®

d = Pitch circle diameter
x = Addendum modification coefficient
A = Distance between pinion axle and rear surface of rack
F_{2T} = Maximum feed force depending on ratio and number of stages
Application-specific dimensioning with cymex® – www.wittenstein-cymex.com
* Other length options available

Motor shaft diameter [mm]

1-stage

greater than 14 (C) up to 19 [4] (E) clamping hub diameters

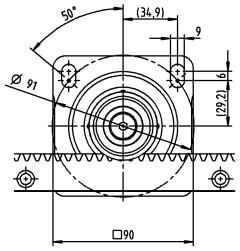

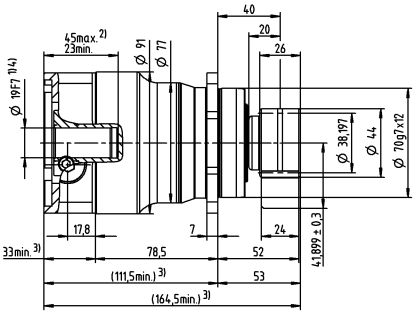

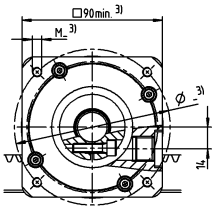

up to 24 [4] (G) clamping hub diameters

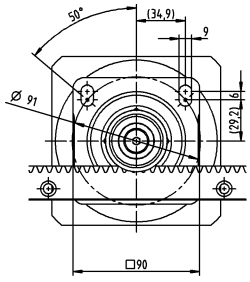

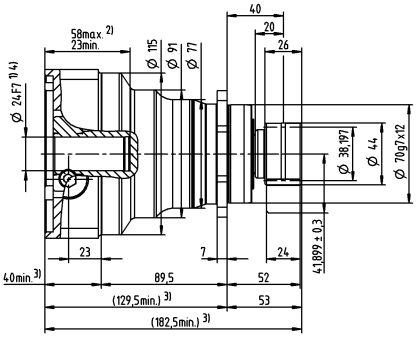

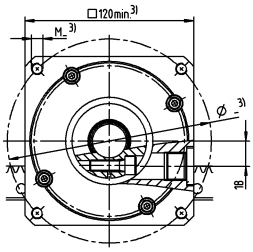

2-stage

greater than 11 (B) up to 14 [4] (C) clamping hub diameters

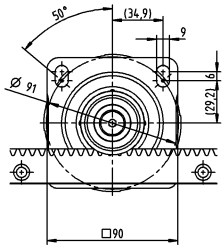

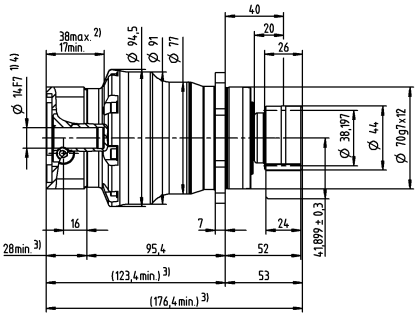

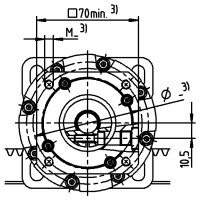

up to 19 [4] (E) clamping hub diameters

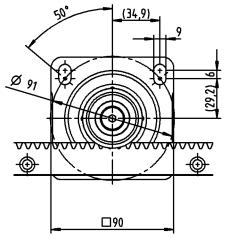

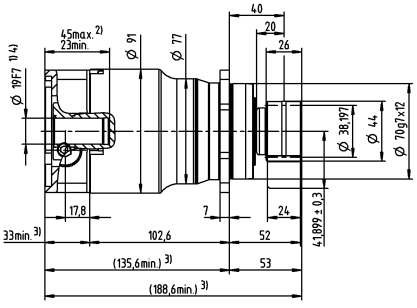

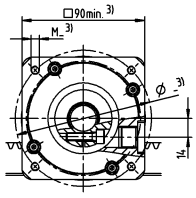

Non-tolerated dimensions are nominal dimensions
Detailed rack dimensions starting on page 161

[1] Check motor shaft fit
[2] Min./Max. permissible motor shaft length. Longer motor shafts are possible, please contact alpha.
[3] The dimensions depend on the motor
[4] Smaller motor shaft diameter is compensated by a bushing with a minimum thickness of 1 mm

Planetary gearbox SP+ 100R MF with rack module 2 and pinion RMS module 2

System	Max. feed force [1] F_{2T}		6040 N	
	Max. feed speed [2] v_{max}		281 m/min	62 m/min
Gearbox	No. of stages		1	2
	Ratios *i*		3 / 4 / 5 / 7 / 8 / 10	16 / 20 / 25 / 28 / 32 / 35 / 40 / 50 / 64 / 70 / 100
	Clamping hub diameter		19 / 24 / 28 / 38 mm	14 / 19 / 24 / 28 mm
	Designation		SP 100R-MF1-_ _ _-2_ _	SP 100R-MF2-_ _ _-2_ _
Pinion	Module *m*		2 mm	
	Number of teeth *z*		23	
	Pitch circle diameter *d*		48.808 mm	
	Profile correction factor *x*		0.4	
	Helix angle *ß*		-19.5283° (left-handed)	
	Designation		RMS 200-323-23L1-032	
Rack	Module *m*		2 mm	
	Length L (options)		1000 mm (2000 mm; 500 mm)	
	Helix angle *ß*		19.5283° (right-handed)	
	Designation		ZST 200-332-1000-R1; optionally with INIRA®	
Lubrication system [3]	Set consisting of lubrication pinion and axis for	Rack	LMT 200-PU -18L1-024-1	
		Pinion	LMT 200-PU -18R1-024-1	
	Lubricator	125 cm³	LUC+125-0511-02	
		400 cm³	LUC+400-0511-02	
	Lubricant		WITTENSTEIN alpha G11	

[1] Maximum feed force depending on ratio and number of stages
[2] Calculation with lowest ratio and maximum input speed
[3] Impulse-controlled basic version with one output and 2 m hose. See page 118 for further information on the lubrication system.
Application-specific dimensioning with cymex® – www.wittenstein-cymex.com

Alternative system solutions

Pinion			Axis distance	SP+ 100R	PBG 3	SK+ 100S	SPC+ 100S	SPK+ 100S	Rack*
Designation	*d* [mm]	*x* [ ]	*A* [mm]	F_{2T} [N]	F_{2T} [N]	F_{2T} [N]	F_{2T} [N]	F_{2T} [N]	Designation
RMK 200-222-26L1-032-021	55.174	0	49.587	6000	6000	5350	6000	6000	ZST 200-332-1000-R1; optionally with INIRA®
RMS 200-323-23L1-032	48.808	0.4	47.204	6040	6040	5350	6040	6040	ZST 200-332-1000-R1; optionally with INIRA®
RMS 200-323-25L1-032	53.052	0.4	49.326	6020	6020	5350	6020	6020	ZST 200-332-1000-R1; optionally with INIRA®
RMS 200-323-27L1-032	57.296	0.3	51.248	6000	6000	5350	6000	6000	ZST 200-332-1000-R1; optionally with INIRA®

d = Pitch circle diameter
x = Addendum modification coefficient
A = Distance between pinion axle and rear surface of rack
F_{2T} = Maximum feed force depending on ratio and number of stages
Application-specific dimensioning with cymex® – www.wittenstein-cymex.com
* Other length options available

Motor shaft diameter [mm]

1-stage

greater than 19 (E) up to 24/28 [4] (G/H) clamping hub diameters

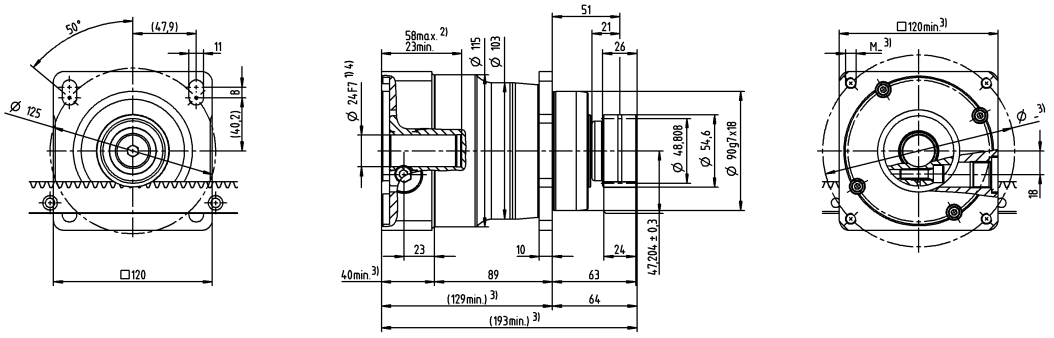

up to 38 [4] (K) clamping hub diameters

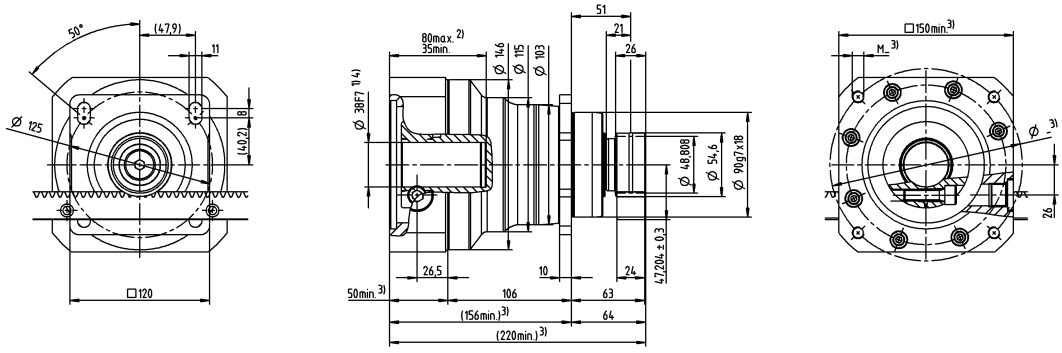

2-stage

greater than 14 (C) up to 19 [4] (E) clamping hub diameters

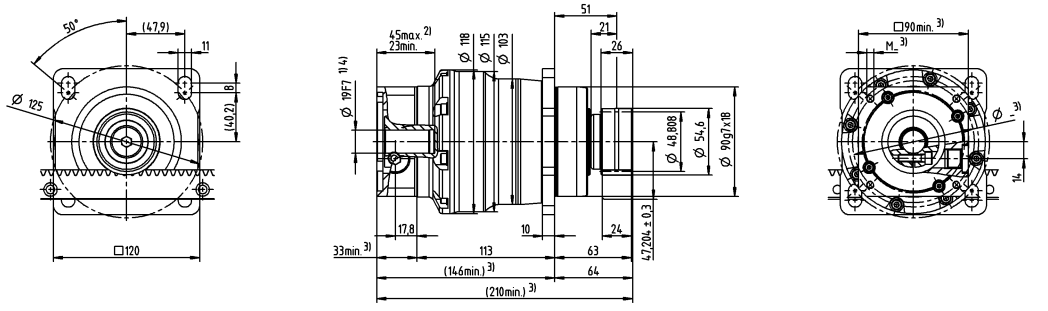

up to 24/28 [4] (G/H) clamping hub diameters

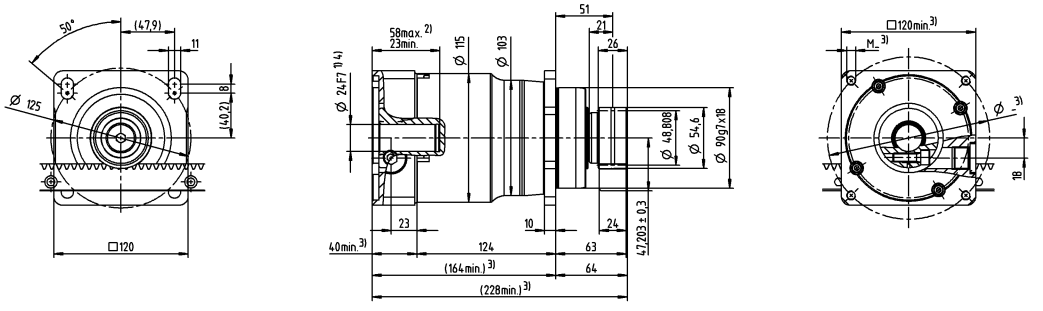

Non-tolerated dimensions are nominal dimensions
Detailed rack dimensions starting on page 161

[1] Check motor shaft fit
[2] Min./Max. permissible motor shaft length. Longer motor shafts are possible, please contact alpha.
[3] The dimensions depend on the motor
[4] Smaller motor shaft diameter is compensated by a bushing with a minimum thickness of 1 mm

Planetary gearbox SP+ 140R MF with rack module 3 and pinion RMS module 3

System	Max. feed force [1] F_{2T}		8600 N	
	Max. feed speed [2] v_{max}		333 m/min	75 m/min
Gearbox	No. of stages		1	2
	Ratios *i*		3 / 4 / 5 / 7 / 8 / 10	16 / 20 / 25 / 28 / 32 / 35 / 40 / 50 / 64 / 70 / 100
	Clamping hub diameter		24 / 32 / 38 / 48 mm	19 / 24 / 38 mm
	Designation		SP 140R-MF1-_ _ _-2_ _	SP 140R-MF2-_ _ _-2_ _
Pinion	Module *m*		3 mm	
	Number of teeth *z*		20	
	Pitch circle diameter *d*		63.662 mm	
	Profile correction factor *x*		0.4	
	Helix angle *ß*		-19.5283° (left-handed)	
	Designation		RMS 300-323-20L1-040	
Rack	Module *m*		3 mm	
	Length L (options)		1000 mm (2000 mm; 500 mm)	
	Helix angle *ß*		19.5283° (right-handed)	
	Designation		ZST 300-332-1000-R1; optionally with INIRA®	
Lubrication system [3]	Set consisting of lubrication pinion and axis for	Rack	LMT 300-PU -18L1-030-1	
		Pinion	LMT 300-PU -18R1-030-1	
	Lubricator	125 cm³	LUC+125-0511-02	
		400 cm³	LUC+400-0511-02	
	Lubricant		WITTENSTEIN alpha G11	

[1] Maximum feed force depending on ratio and number of stages
[2] Calculation with lowest ratio and maximum input speed
[3] Impulse-controlled basic version with one output and 2 m hose. See page 118 for further information on the lubrication system.
Application-specific dimensioning with cymex® – www.wittenstein-cymex.com

Alternative system solutions

Pinion			**Axis distance**	**SP+ 140R**	**SK+ 140S**	**SPC+ 140S**	**SPK+ 140S**	**Rack***
Designation	*d* [mm]	*x* [ ]	*A* [mm]	F_{2T} [N]	F_{2T} [N]	F_{2T} [N]	F_{2T} [N]	Designation
RMK 300-222-24L1-040-035	76.394	0	64.197	8550	8340	8550	8520	ZST 300-332-1000-R1; optionally with INIRA®
RMS 300-323-20L1-040	63.662	0.4	59.031	8600	8380	8600	8600	ZST 300-332-1000-R1; optionally with INIRA®
RMS 300-323-22L1-040	70.028	0.4	62.214	8590	8360	8590	8540	ZST 300-332-1000-R1; optionally with INIRA®
RMS 300-323-24L1-040	76.394	0.4	65.397	8550	8340	8550	8520	ZST 300-332-1000-R1; optionally with INIRA®

d = Pitch circle diameter
x = Addendum modification coefficient
A = Distance between pinion axle and rear surface of rack
F_{2T} = Maximum feed force depending on ratio and number of stages
Application-specific dimensioning with cymex® – www.wittenstein-cymex.com
* Other length options available

1-stage

greater than 24 (G)
up to 32/38 [4] (I/K)
clamping hub
diameters

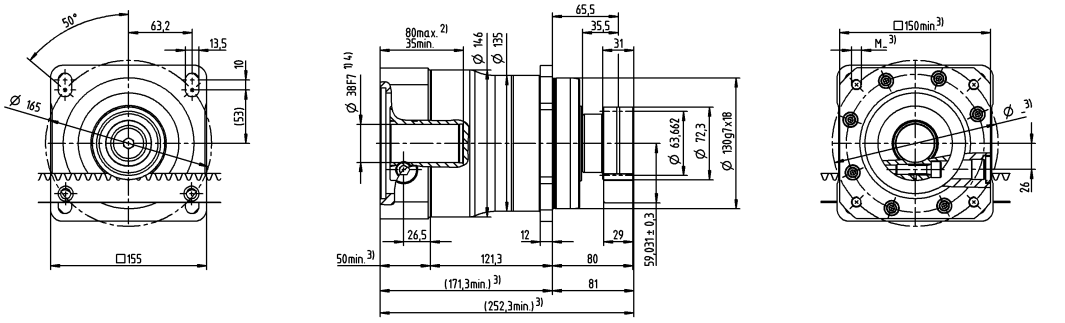

up to 48 [4] (M)
clamping hub
diameters

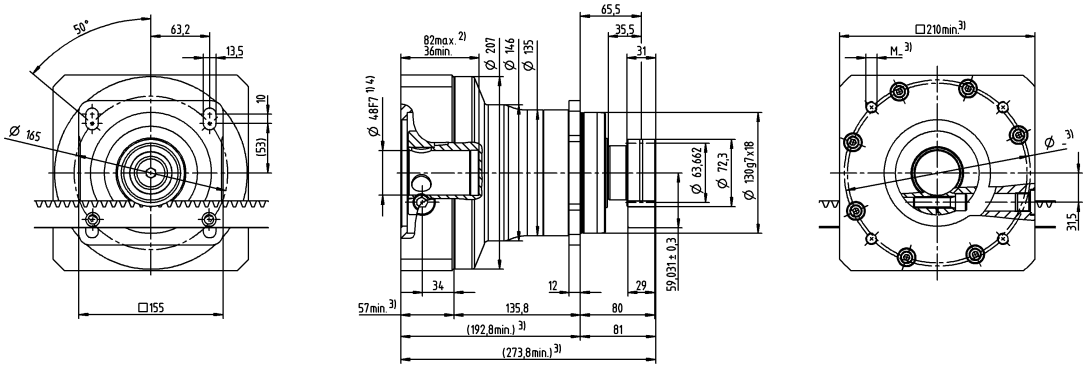

2-stage

greater than 19 (E)
up to 24 [4] (G)
clamping hub
diameters

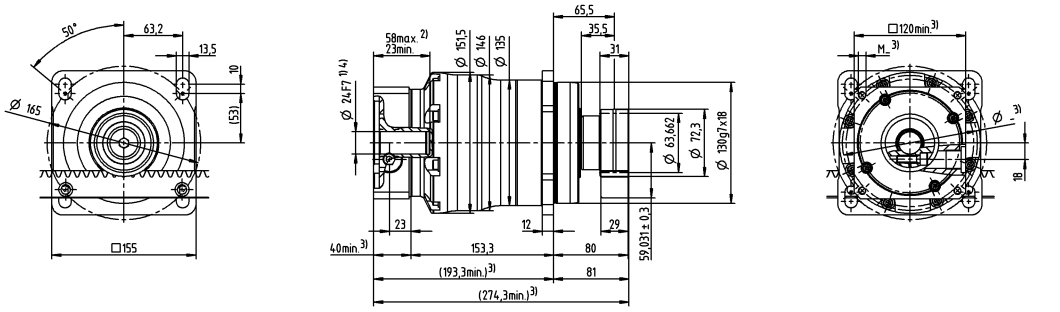

up to 38 [4] (K)
clamping hub
diameters

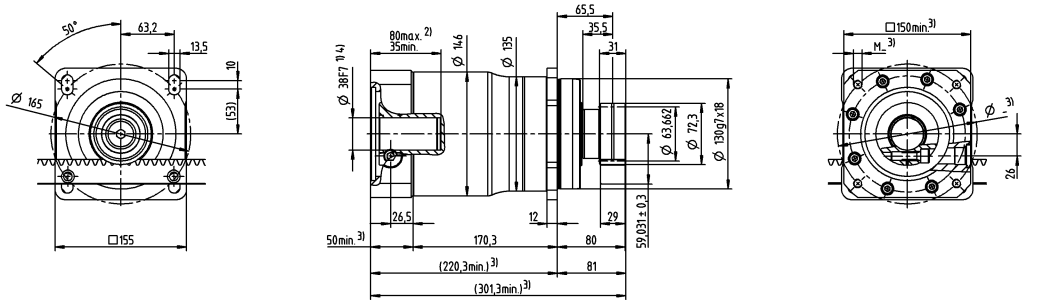

Motor shaft diameter [mm]

Non-tolerated dimensions are nominal dimensions
Detailed rack dimensions starting on page 161

[1] Check motor shaft fit
[2] Min./Max. permissible motor shaft length. Longer motor shafts are possible, please contact alpha.
[3] The dimensions depend on the motor
[4] Smaller motor shaft diameter is compensated by a bushing with a minimum thickness of 1 mm

Planetary gearbox SP+ 180 MF with rack module 4 and pinion RMS module 4

System	Max. feed force [1] F_{2T}		12500 N	
	Max. feed speed [2] v_{max}		400 m/min	83 m/min
Gearbox	No. of stages		1	2
	Ratios *i*		3 / 4 / 5 / 7 / 8 / 10	16 / 20 / 25 / 28 / 32 / 35 / 40 / 50 / 64 / 70 / 100
	Clamping hub diameter		38 / 48 / 55 mm	24 / 32 / 38 / 48 mm
	Designation		SP 180S-MF1-_ _ _-2_ _	SP 180S-MF2-_ _ _-2_ _
Pinion	Module *m*		4 mm	
	Number of teeth *z*		20	
	Pitch circle diameter *d*		84.883 mm	
	Profile correction factor *x*		0.4	
	Helix angle *ß*		-19.5283° (left-handed)	
	Designation		RMS 400-323-20L1-055	
Rack	Module *m*		4 mm	
	Length L (options)		1000 mm (2000 mm, 493 mm)	
	Helix angle *ß*		19.5283° (right-handed)	
	Designation		ZST 400-332-1000-R1; optionally with INIRA®	
Lubrication system [3]	Set consisting of lubrication pinion and axis for	Rack	LMT 400-PU -18L1-040-1	
		Pinion	LMT 400-PU -18R1-040-1	
	Lubricator	125 cm³	LUC+125-0511-02	
		400 cm³	LUC+400-0511-02	
	Lubricant		WITTENSTEIN alpha G11	

[1] Maximum feed force depending on ratio and number of stages
[2] Calculation with lowest ratio and maximum input speed
[3] Impulse-controlled basic version with one output and 2 m hose. See page 118 for further information on the lubrication system.
Application-specific dimensioning with cymex® – www.wittenstein-cymex.com

Alternative system solutions

Pinion			Axis distance	SP+ 180S	SK+ 180S	SPC+ 180S	SPK+ 180S	Rack*
Designation	*d* [mm]	*x* [ ]	*A* [mm]	F_{2T} [N]	F_{2T} [N]	F_{2T} [N]	F_{2T} [N]	Designation
RMS 400-323-20L1-055	84.883	0.4	79.041	12500	13100	12500	12500	ZST 400-332-1000-R1; optionally with INIRA®

d = Pitch circle diameter
x = Addendum modification coefficient
A = Distance between pinion axle and rear surface of rack
F_{2T} = Maximum feed force depending on ratio and number of stages
Application-specific dimensioning with cymex® – www.wittenstein-cymex.com
* Other length options available

Motor shaft diameter [mm]

1-stage

greater than 38 (K)
up to 48 [4] (M)
clamping hub
diameters

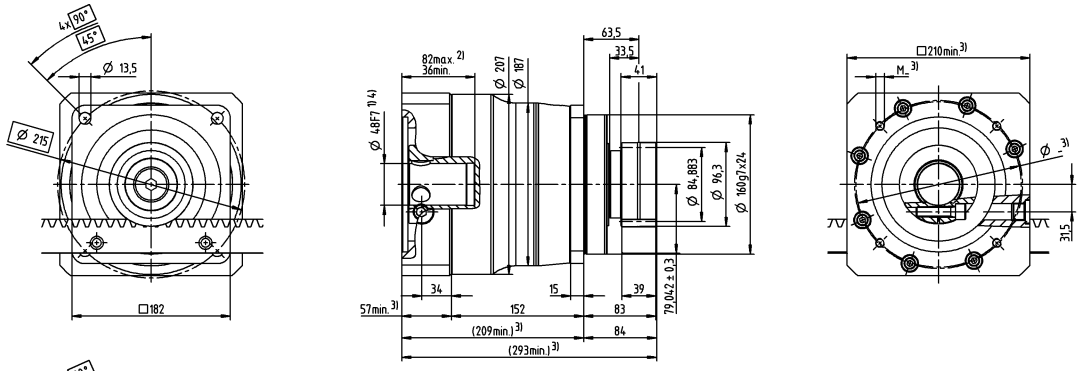

up to 55 [4] (N)
clamping hub
diameters

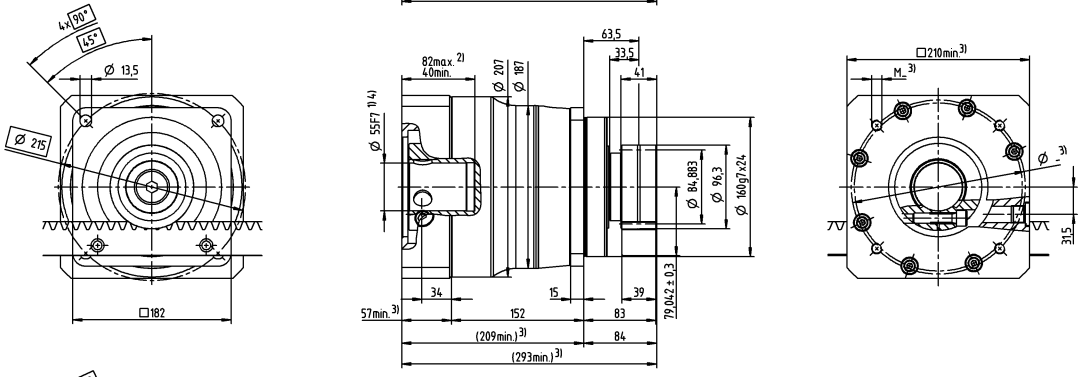

2-stage

greater than 24 (G)
up to 32/38 [4] (I/K)
clamping hub
diameters

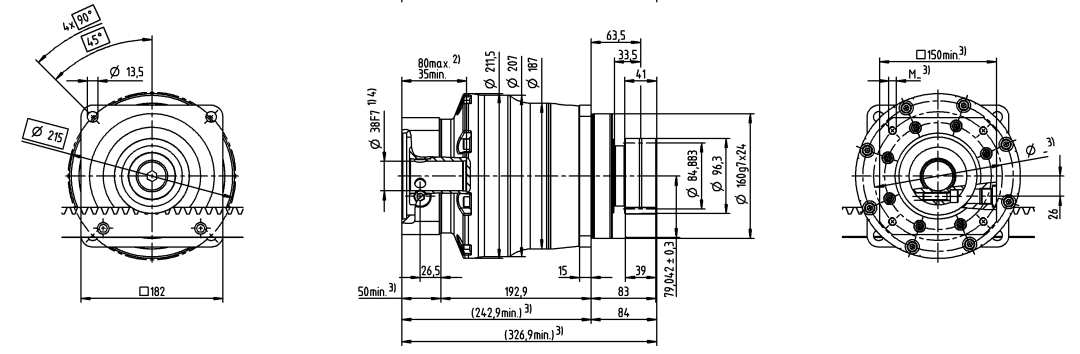

up to 48 [4] (M)
clamping hub
diameters

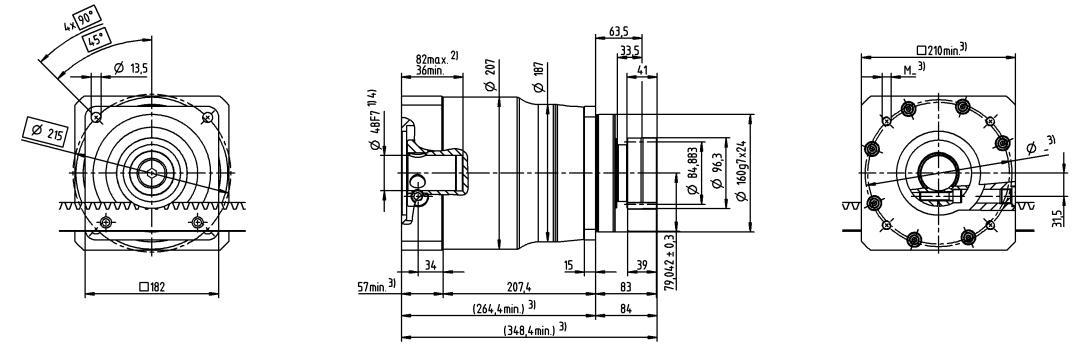

Non-tolerated dimensions are nominal dimensions
Detailed rack dimensions starting on page 161

[1] Check motor shaft fit
[2] Min./Max. permissible motor shaft length. Longer motor shafts are possible, please contact alpha.
[3] The dimensions depend on the motor
[4] Smaller motor shaft diameter is compensated by a bushing with a minimum thickness of 1 mm

Planetary gearbox TP+ 004 MF with rack module 2 and pinion RMF module 2

System	Max. feed force [1] F_{2T}		1370 N	
	Max. feed speed [2] v_{max}		325 m/min	81 m/min
Gearbox	No. of stages		1	2
	Ratios *i*		4 / 5 / 7 / 8 / 10	16 / 20 / 21 / 25 / 28 / 31 / 32 / 35 / 40 / 50 / 61 / 64 / 70 / 91 / 100
	Clamping hub diameter		11 / 14 / 19 mm	11 / 14 mm
	Designation		TP 004S-MF1-_ _ _-0_ _	TP 004S-MF2-_ _ _-0_ _
Pinion	Module *m*		2 mm	
	Number of teeth *z*		26	
	Pitch circle diameter *d*		55.174 mm	
	Profile correction factor *x*		0.4	
	Helix angle *ß*		-19.5283° (left-handed)	
	Designation		RMF 200-443-26L1-031-8xM5	
Rack	Module *m*		2 mm	
	Length L (options)		1000 mm (2000 mm; 500 mm)	
	Helix angle *ß*		19.5283° (right-handed)	
	Designation		ZST 200-332-1000-R1; optionally with INIRA®	
Lubrication system [3]	Set consisting of lubrication pinion and axis for	Rack	LMT 200-PU -18L1-024-1	
		Pinion	LMT 200-PU -18R1-024-1	
	Lubricator	125 cm³	LUC+125-0511-02	
		400 cm³	LUC+400-0511-02	
	Lubricant		WITTENSTEIN alpha G11	

[1] Maximum feed force depending on ratio and number of stages
[2] Calculation with lowest ratio and maximum input speed
[3] Impulse-controlled basic version with one output and 2 m hose. See page 118 for further information on the lubrication system.
Application-specific dimensioning with cymex® – www.wittenstein-cymex.com

Alternative system solutions

Pinion			Axis distance	TP+ 004S	PAG 1	TK+ 004S	TPC+ 004S	Rack*
Designation	*d* [mm]	*x* [ ]	*A* [mm]	F_{2T} [N]	F_{2T} [N]	F_{2T} [N]	F_{2T} [N]	Designation
RMF 200-443-26L1-031-8xM5	55.174	0.4	50.387	1370	1370	1300	1370	ZST 200-332-1000-R1; optionally with INIRA®

d = Pitch circle diameter
x = Addendum modification coefficient
A = Distance between pinion axle and rear surface of rack
F_{2T} = Maximum feed force depending on ratio and number of stages
Application-specific dimensioning with cymex® – www.wittenstein-cymex.com
* Other length options available

Motor shaft diameter [mm]

1-stage

greater than 11 (B) up to 14 [4] (C) clamping hub diameters

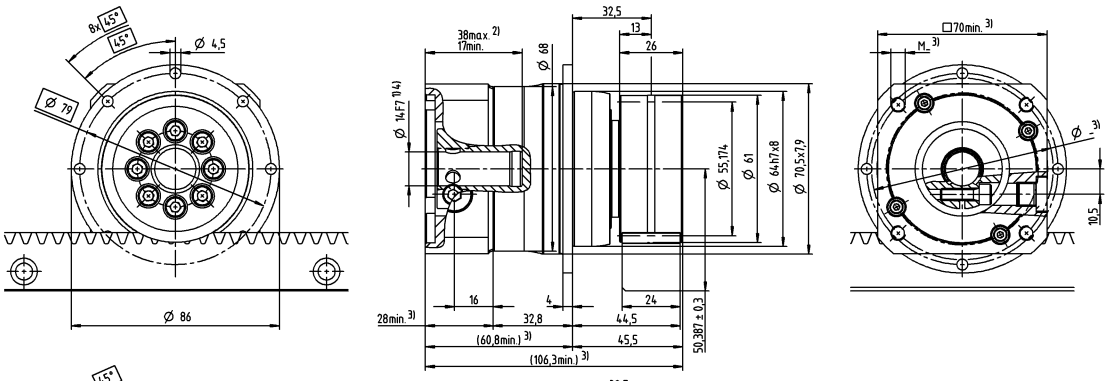

up to 19 [4] (E) clamping hub diameters

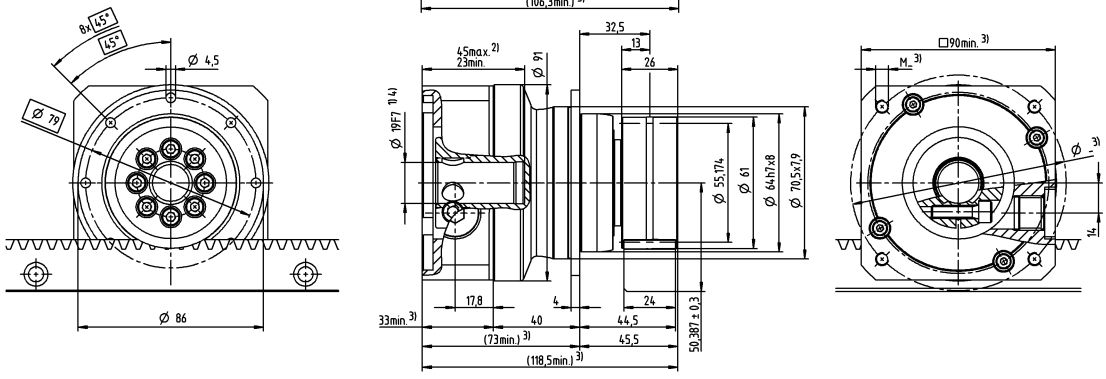

2-stage

up to 11 [4] (B) clamping hub diameters

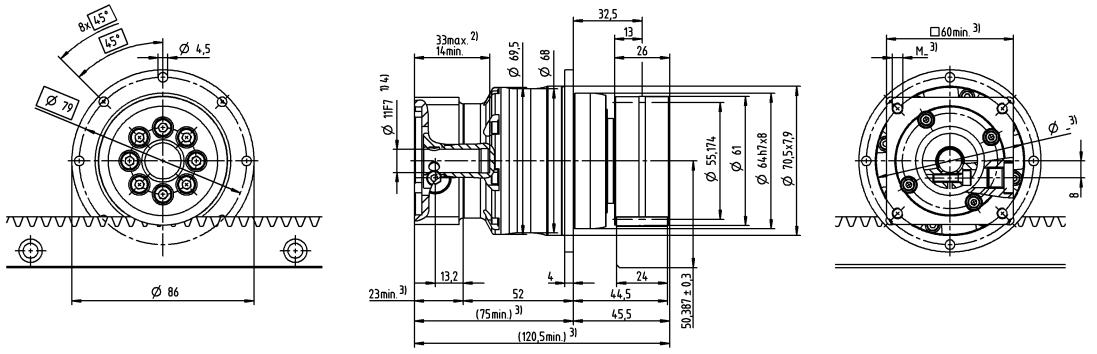

up to 14 [4] (C) clamping hub diameters

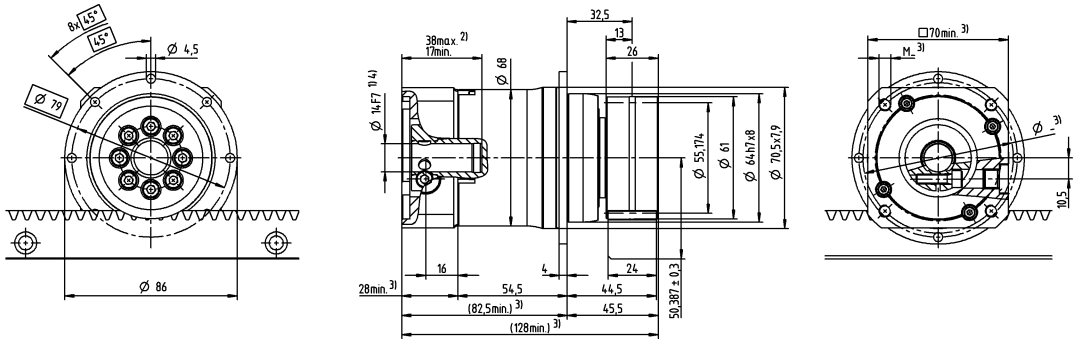

Non-tolerated dimensions are nominal dimensions
Detailed rack dimensions starting on page 161

[1] Check motor shaft fit
[2] Min./Max. permissible motor shaft length. Longer motor shafts are possible, please contact alpha.
[3] The dimensions depend on the motor
[4] Smaller motor shaft diameter is compensated by a bushing with a minimum thickness of 1 mm

Planetary gearbox TP+ 010 MF with rack module 2 and pinion RMF module 2

System	Max. feed force [1] F_{2T}		2500 N	
	Max. feed speed [2] v_{max}		412 m/min	103 m/min
Gearbox	No. of stages		1	2
	Ratios *i*		4 / 5 / 7 / 8 / 10	16 / 20 / 21 / 25 / 28 / 31 / 32 / 35 / 40 / 50 / 61 / 64 / 70 / 91 / 100
	Clamping hub diameter		14 / 19 / 24 mm	11 / 14 / 19 mm
	Designation		TP 010S-MF1-_ _ _-0_ _	TP 010S-MF2-_ _ _-0_ _
Pinion	Module *m*		2 mm	
	Number of teeth *z*		33	
	Pitch circle diameter *d*		70.028 mm	
	Profile correction factor *x*		0.3	
	Helix angle *ß*		-19.5283° (left-handed)	
	Designation		RMF 200-443-33L1-050-8xM6	
Rack	Module *m*		2 mm	
	Length L (options)		1000 mm (2000 mm; 500 mm)	
	Helix angle *ß*		19.5283° (right-handed)	
	Designation		ZST 200-332-1000-R1; optionally with INIRA®	
Lubrication system [3]	Set consisting of lubrication pinion and axis for	Rack	LMT 200-PU -18L1-024-1	
		Pinion	LMT 200-PU -18R1-024-1	
	Lubricator	125 cm³	LUC+125-0511-02	
		400 cm³	LUC+400-0511-02	
	Lubricant		WITTENSTEIN alpha G11	

[1] Maximum feed force depending on ratio and number of stages
[2] Calculation with lowest ratio and maximum input speed
[3] Impulse-controlled basic version with one output and 2 m hose. See page 118 for further information on the lubrication system.
Application-specific dimensioning with cymex® – www.wittenstein-cymex.com

Alternative system solutions

Pinion			Axis distance	TP+ 010S	PAG 2	TK+ 010S	TPK+ 010S	TPC+ 010S	Rack*
Designation	*d* [mm]	*x* [ ]	*A* [mm]	F_{2T} [N]	F_{2T} [N]	F_{2T} [N]	F_{2T} [N]	F_{2T} [N]	Designation
RMF 200-443-29L1-050-8xM6	61.540	0.3	53.370	2290	2290	3030	2290	2290	ZST 200-332-1000-R1; optionally with INIRA®
RMF 200-443-33L1-050-8xM6	70.028	0.3	57.614	2500	2500	2380	2500	2500	ZST 200-332-1000-R1; optionally with INIRA®
RMF 200-443-37L1-050-8xM6	78.517	0.3	61.858	2470	2470	2120	2470	2470	ZST 200-332-1000-R1; optionally with INIRA®
RMW 200-444-20L1-037	42.441	0.4	44.021	2280	2280	–	2280	2280	ZST 200-332-1000-R1; optionally with INIRA®

d = Pitch circle diameter
x = Addendum modification coefficient
A = Distance between pinion axle and rear surface of rack
F_{2T} = Maximum feed force depending on ratio and number of stages
Application-specific dimensioning with cymex® – www.wittenstein-cymex.com
* Other length options available

Motor shaft diameter [mm]

1-stage

greater than 14 (C) up to 19 [4] (E) clamping hub diameters

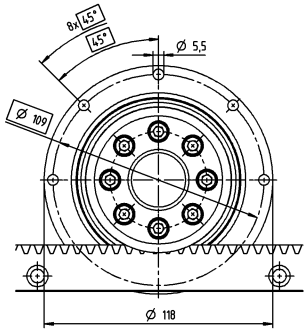

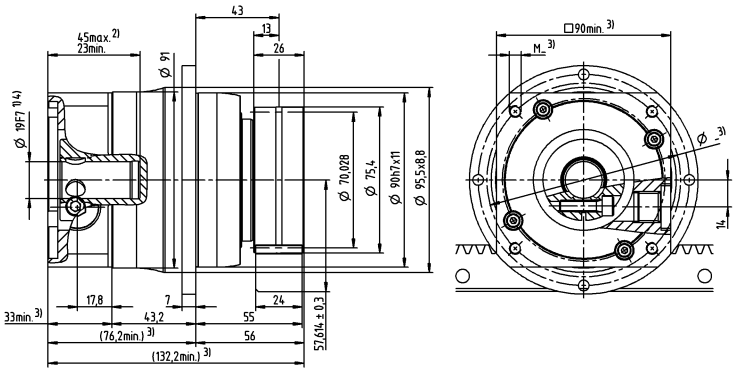

up to 24 [4] (G) clamping hub diameters

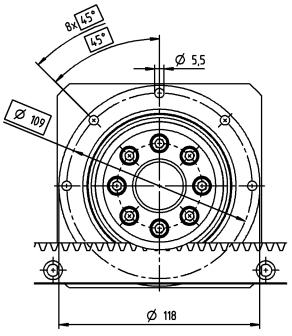

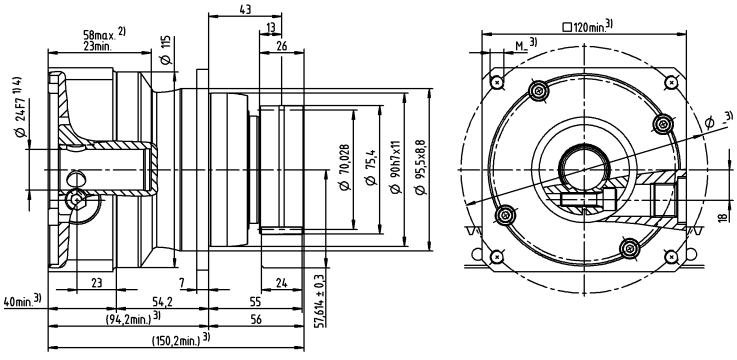

2-stage

greater than 11 (B) up to 14 [4] (C) clamping hub diameters

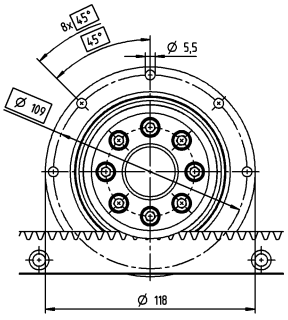

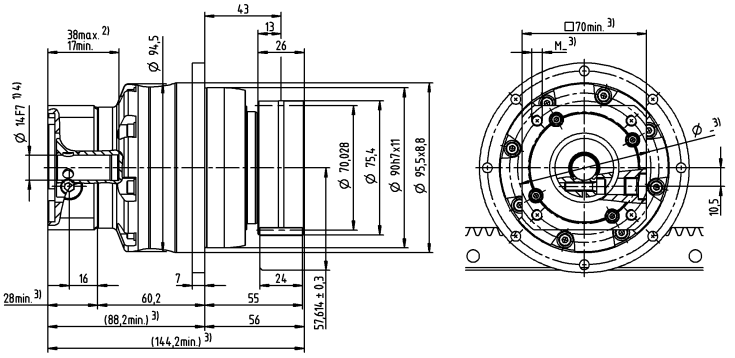

up to 19 [4] (E) clamping hub diameters

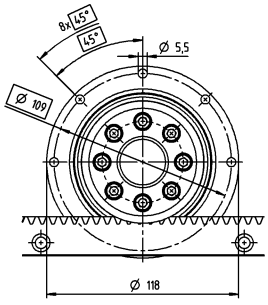

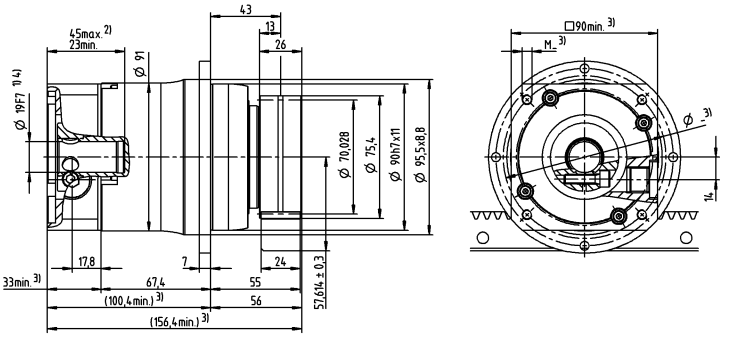

Non-tolerated dimensions are nominal dimensions
Detailed rack dimensions starting on page 161

[1] Check motor shaft fit
[2] Min./Max. permissible motor shaft length. Longer motor shafts are possible, please contact alpha.
[3] The dimensions depend on the motor
[4] Smaller motor shaft diameter is compensated by a bushing with a minimum thickness of 1 mm

Planetary gearbox TP+ 025 MF with rack module 2 and pinion RMF module 2

System	Max. feed force [1] F_{2T}		3600 N	
	Max. feed speed [2] v_{max}		367 m/min	125 m/min
Gearbox	No. of stages		1	2
	Ratios *i*		4 / 5 / 7 / 8 / 10	16 / 20 / 21 / 25 / 28 / 31 / 32 / 35 / 40 / 50 / 61 / 64 / 70 / 91 / 100
	Clamping hub diameter		19 / 24 / 28 / 38 mm	14 / 19 / 24 mm
	Designation		TP 025S-MF1-_ _ _-0_ _	TP 025S-MF2-_ _ _-0_ _
Pinion	Module *m*		2 mm	
	Number of teeth *z*		40	
	Pitch circle diameter *d*		84.883 mm	
	Profile correction factor *x*		0.3	
	Helix angle *ß*		-19.5283° (left-handed)	
	Designation		RMF 200-443-40L1-063-12xM6	
Rack	Module *m*		2 mm	
	Length L (options)		1000 mm (2000 mm; 500 mm)	
	Helix angle *ß*		19.5283° (right-handed)	
	Designation		ZST 200-332-1000-R1; optionally with INIRA®	
Lubrication system [3]	Set consisting of lubrication pinion and axis for	Rack	LMT 200-PU -18L1-024-1	
		Pinion	LMT 200-PU -18R1-024-1	
	Lubricator	125 cm³	LUC+125-0511-02	
		400 cm³	LUC+400-0511-02	
	Lubricant		WITTENSTEIN alpha G11	

[1] Maximum feed force depending on ratio and number of stages
[2] Calculation with lowest ratio and maximum input speed
[3] Impulse-controlled basic version with one output and 2 m hose. See page 118 for further information on the lubrication system.
Application-specific dimensioning with cymex® – www.wittenstein-cymex.com

Alternative system solutions

Pinion			Axis distance	TP+ 025S	PAG 3	TK+ 025S	TPK+ 025S	TPC+ 025S	Rack*
Designation	*d* [mm]	*x* [ ]	*A* [mm]	F_{2T} [N]	F_{2T} [N]	F_{2T} [N]	F_{2T} [N]	F_{2T} [N]	Designation
RMF 200-443-35L1-063-12xM6	74.272	0.3	59.736	3330	3330	4300	3330	3330	ZST 200-332-1000-R1; optionally with INIRA®
RMF 200-443-40L1-063-12xM6	84.883	0.3	65.041	3600	3600	3990	3600	3600	ZST 200-332-1000-R1; optionally with INIRA®
RMF 200-443-45L1-063-12xM6	95.493	0.22	70.187	3580	3580	3540	3580	3580	ZST 200-332-1000-R1; optionally with INIRA®
RMW 200-444-20L1-037	42.441	0.4	44.021	3370	3370	–	3370	3370	ZST 200-332-1000-R1; optionally with INIRA®
RMW 300-444-20L1-055	63.662	0.4	59.031	3220	3220	–	3220	3220	ZST 300-332-1000-R1; optionally with INIRA®

d = Pitch circle diameter
x = Addendum modification coefficient
A = Distance between pinion axle and rear surface of rack
F_{2T} = Maximum feed force depending on ratio and number of stages
Application-specific dimensioning with cymex® – www.wittenstein-cymex.com
* Other length options available

Motor shaft diameter [mm]

1-stage

greater than 19 (E)
up to 24/28 [4] (G/H)
clamping hub
diameters

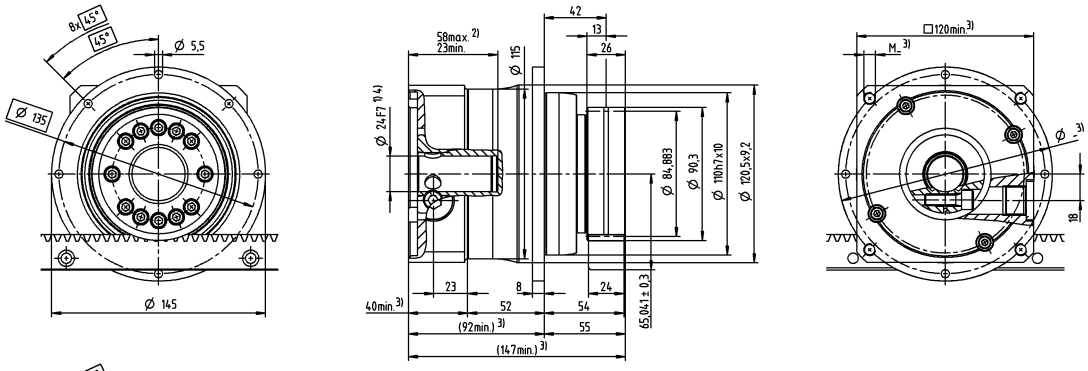

up to 38 [4] (K)
clamping hub
diameters

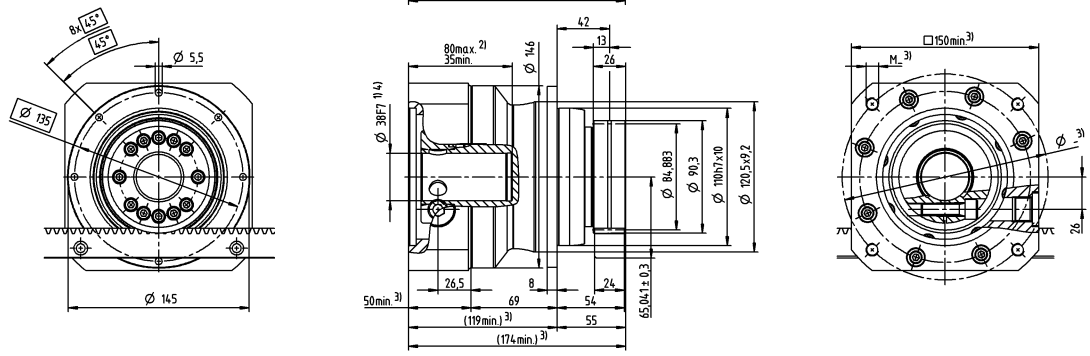

2-stage

greater than 14 (C)
up to 19 [4] (E)
clamping hub
diameters

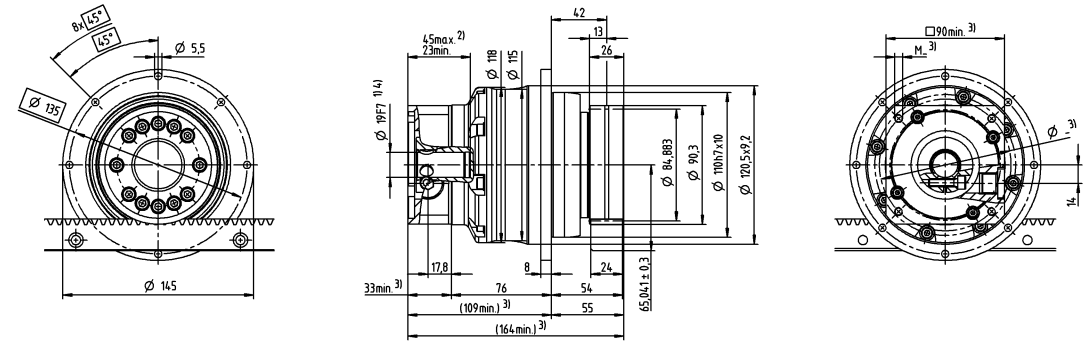

up to 24/28 [4] (G/H)
clamping hub
diameters

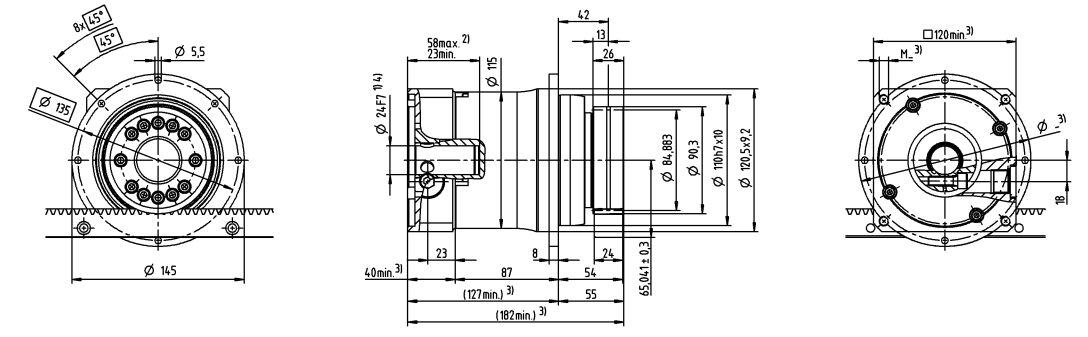

Non-tolerated dimensions are nominal dimensions
Detailed rack dimensions starting on page 161

[1] Check motor shaft fit
[2] Min./Max. permissible motor shaft length. Longer motor shafts are possible, please contact alpha.
[3] The dimensions depend on the motor
[4] Smaller motor shaft diameter is compensated by a bushing with a minimum thickness of 1 mm

Planetary gearbox TP+ 050 MF with rack module 3 and pinion RMF module 3

System	Max. feed force [1] F_{2T}		11800 N	
	Max. feed speed [2] v_{max}		438 m/min	137 m/min
Gearbox	No. of stages		1	2
	Ratios *i*		4 / 5 / 7 / 8 / 10	16 / 20 / 21 / 25 / 28 / 31 / 32 / 35 / 40 / 50 / 61 / 64 / 70 / 91 / 100
	Clamping hub diameter		24 / 32 / 38 / 48 mm	19 / 24 / 38 mm
	Designation		TP 050S-MF1-_ _ _-0_ _	TP 050S-MF2-_ _ _-0_ _
Pinion	Module *m*		3 mm	
	Number of teeth *z*		35	
	Pitch circle diameter *d*		111.409 mm	
	Profile correction factor *x*		0.3	
	Helix angle *ß*		-19.5283° (left-handed)	
	Designation		RMF 300-443-35L1-080-12xM8	
Rack	Module *m*		3	
	Length L (options)		1000 mm (2000 mm; 500 mm)	
	Helix angle *ß*		19.5283° (right-handed)	
	Designation		ZST 300-332-1000-R1; optionally with INIRA®	
Lubrication system [3]	Set consisting of lubrication pinion and axis for	Rack	LMT 300-PU -18L1-030-1	
		Pinion	LMT 300-PU -18R1-030-1	
	Lubricator	125 cm³	LUC+125-0511-02	
		400 cm³	LUC+400-0511-02	
	Lubricant		WITTENSTEIN alpha G11	

[1] Maximum feed force depending on ratio and number of stages
[2] Calculation with lowest ratio and maximum input speed
[3] Impulse-controlled basic version with one output and 2 m hose. See page 118 for further information on the lubrication system.
Application-specific dimensioning with cymex® – www.wittenstein-cymex.com

Alternative system solutions

Pinion			Axis distance	TP+ 050S	TK+ 050S	TPK+ 050S	TPC+ 050S	Rack*
Designation	*d* [mm]	*x* [ ]	*A* [mm]	F_{2T} [N]	F_{2T} [N]	F_{2T} [N]	F_{2T} [N]	Designation
RMF 300-443-31L1-080-12xM8	98.676	0.3	76.238	10600	7250	10600	10600	ZST 300-332-1000-R1; optionally with INIRA®
RMF 300-443-35L1-080-12xM8	111.409	0.3	82.604	11800	6450	11800	11800	ZST 300-332-1000-R1; optionally with INIRA®
RMF 300-443-40L1-080-12xM8	127.324	0.3	90.562	11100	5600	11100	10900	ZST 300-332-1000-R1; optionally with INIRA®
RMW 300-444-20L1-055	63.662	0.4	59.031	10900	–	10900	10900	ZST 300-332-1000-R1; optionally with INIRA®
RMW 400-444-20L1-073	84.882	0.2	78.241	10350	–	10350	10350	ZST 400-332-1000-R1; optionally with INIRA®

d = Pitch circle diameter
x = Addendum modification coefficient
A = Distance between pinion axle and rear surface of rack
F_{2T} = Maximum feed force depending on ratio and number of stages
Application-specific dimensioning with cymex® – www.wittenstein-cymex.com
* Other length options available

Motor shaft diameter [mm]

1-stage

greater than 24 (G)
up to 32/38 [4] (I/K)
clamping hub
diameters

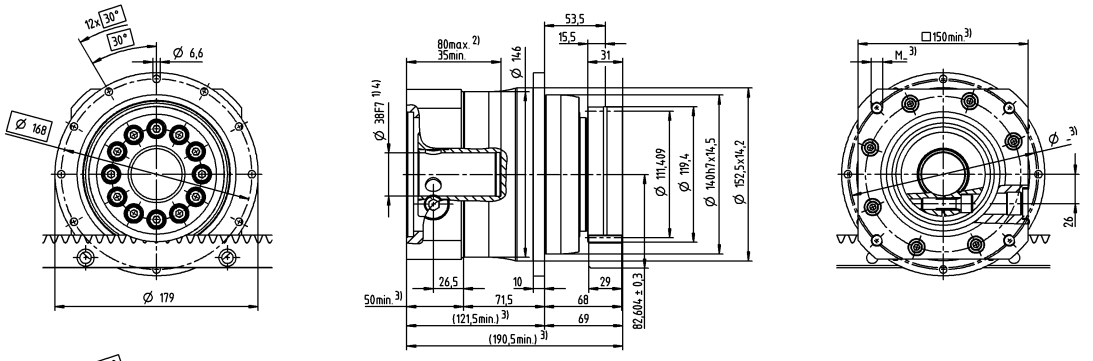

up to 48 [4] (M)
clamping hub
diameters

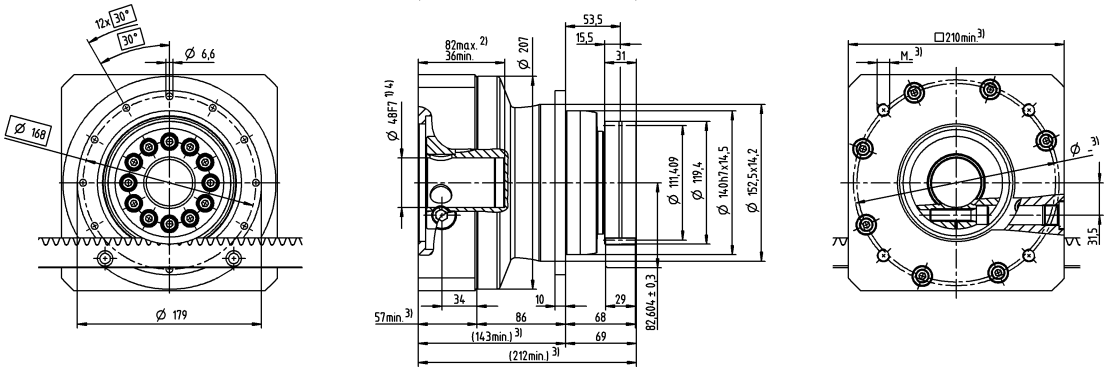

2-stage

greater than 19 (E)
up to 24 [4] (G)
clamping hub
diameters

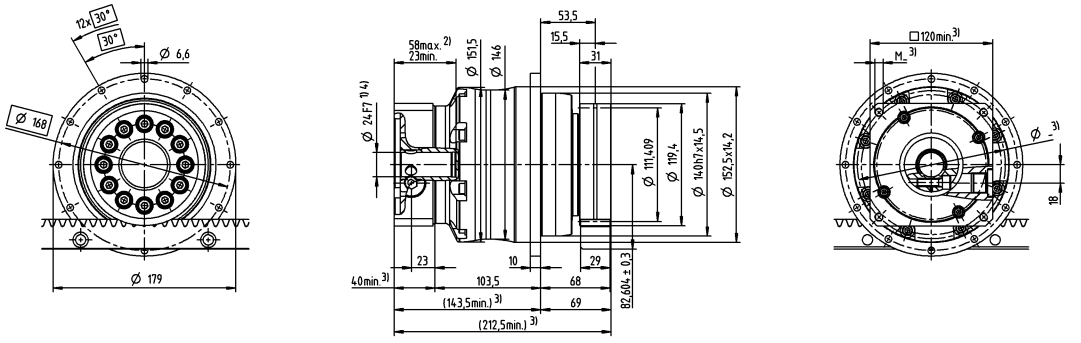

up to 38 [4] (K)
clamping hub
diameters

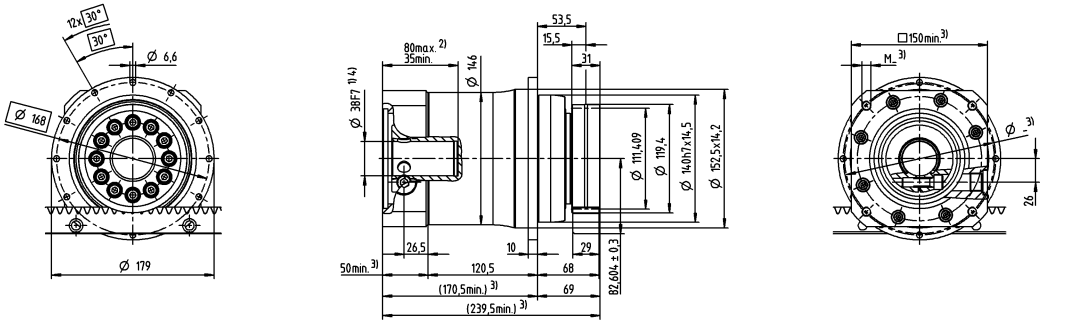

Non-tolerated dimensions are nominal dimensions
Detailed rack dimensions starting on page 161

1) Check motor shaft fit
2) Min./Max. permissible motor shaft length. Longer motor shafts are possible, please contact alpha.
3) The dimensions depend on the motor
4) Smaller motor shaft diameter is compensated by a bushing with a minimum thickness of 1 mm

Planetary gearbox TP+ 110 MF with rack module 4 and pinion RMF module 4

System	Max. feed force [1] F_{2T}		19700 N	
	Max. feed speed [2] v_{max}		570 m/min	178 m/min
Gearbox	No. of stages		1	2
	Ratios *i*		4 / 5 / 7 / 8 / 10	16 / 20 / 21 / 25 / 28 / 31 / 32 / 35 / 40 / 50 / 61 / 64 / 70 / 91 / 100
	Clamping hub diameter		38 / 48 / 55 mm	24 / 32 / 38 / 48 mm
	Designation		TP 110S-MF1-_ _ _-0_ _	TP 110S-MF2-_ _ _-0_ _
Pinion	Module *m*		4 mm	
	Number of teeth *z*		38	
	Pitch circle diameter *d*		161.277 mm	
	Profile correction factor *x*		0.25	
	Helix angle *ß*		-19.5283° (left-handed)	
	Designation		RMF 400-443-38L1-125-12xM10	
Rack	Module *m*		4 mm	
	Length L (options)		1000 mm (2000 mm, 493 mm)	
	Helix angle *ß*		19.5283° (right-handed)	
	Designation		ZST 400-334-1000-R15; optionally with INIRA®	
Lubrication system [3]	Set consisting of lubrication pinion and axis for	Rack	LMT 400-PU -18L1-040-1	
		Pinion	LMT 400-PU -18R1-040-1	
	Lubricator	125 cm³	LUC+125-0511-02	
		400 cm³	LUC+400-0511-02	
	Lubricant		WITTENSTEIN alpha G11	

[1] Maximum feed force depending on ratio and number of stages
[2] Calculation with lowest ratio and maximum input speed
[3] Impulse-controlled basic version with one output and 2 m hose. See page 118 for further information on the lubrication system.
Application-specific dimensioning with cymex® – www.wittenstein-cymex.com

Alternative system solutions

Pinion			Axis distance	TP+ 110S	TPK+ 110S	TPC+ 110S	Rack*
Designation	*d* [mm]	*x* [ ]	*A* [mm]	F_{2T} [N]	F_{2T} [N]	F_{2T} [N]	Designation
RMF 400-443-38L1-125-12xM10	161.277	0.25	116.639	19700	19700	19700	ZST 400-332-1000-R15; optionally with INIRA®
RMW 400-444-20L1-073	84.882	0.2	78.241	21000	21000	21000	ZST 400-332-1000-R15; optionally with INIRA®
RMW 500-444-19L1-089	100.798	0.4	86.399	20000	20000	20000	ZST 500-332-1000-R1; optionally with INIRA®

d = Pitch circle diameter
x = Addendum modification coefficient
A = Distance between pinion axle and rear surface of rack
F_{2T} = Maximum feed force depending on ratio and number of stages
Application-specific dimensioning with cymex® – www.wittenstein-cymex.com
* Other length options available

Motor shaft diameter [mm]

1-stage

greater than 38 (K)
up to 48 [4] (M)
clamping hub
diameters

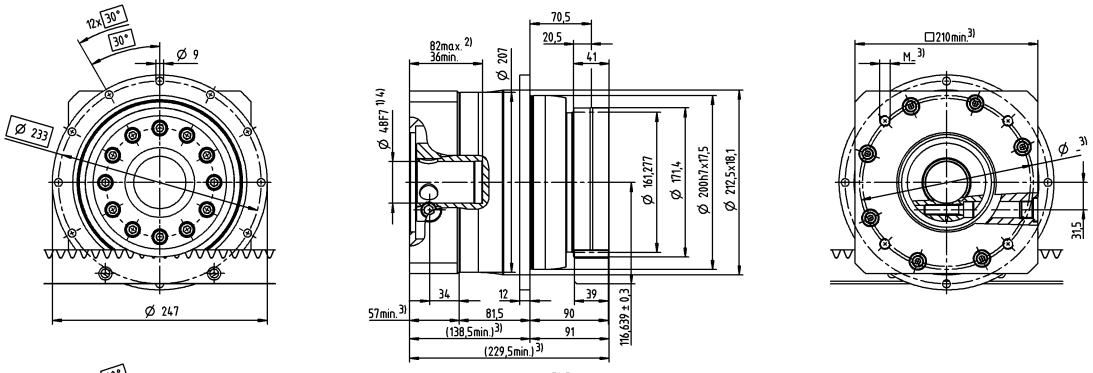

up to 55 [4] (N)
clamping hub
diameters

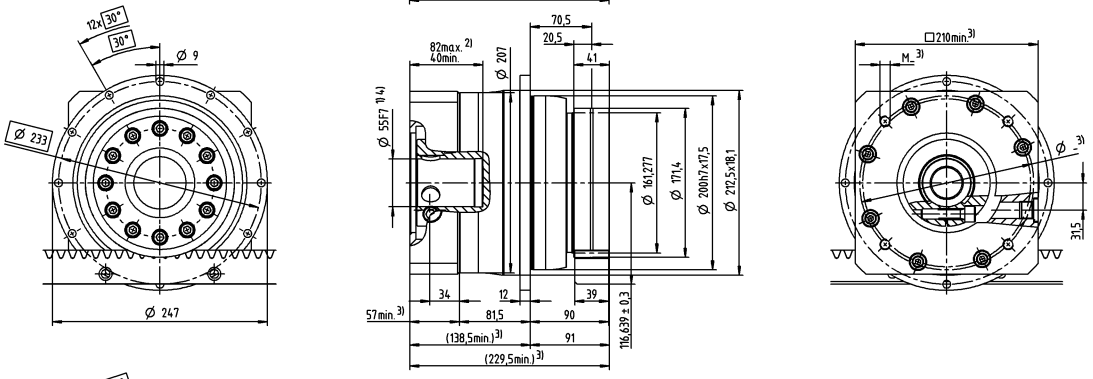

2-stage

greater than 24 (G)
up to 32/38 [4] (I/K)
clamping hub
diameters

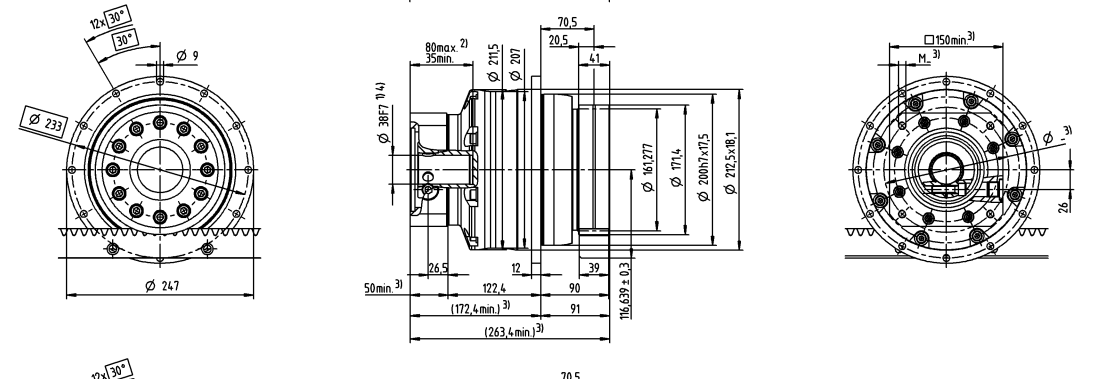

up to 48 [4] (M)
clamping hub
diameters

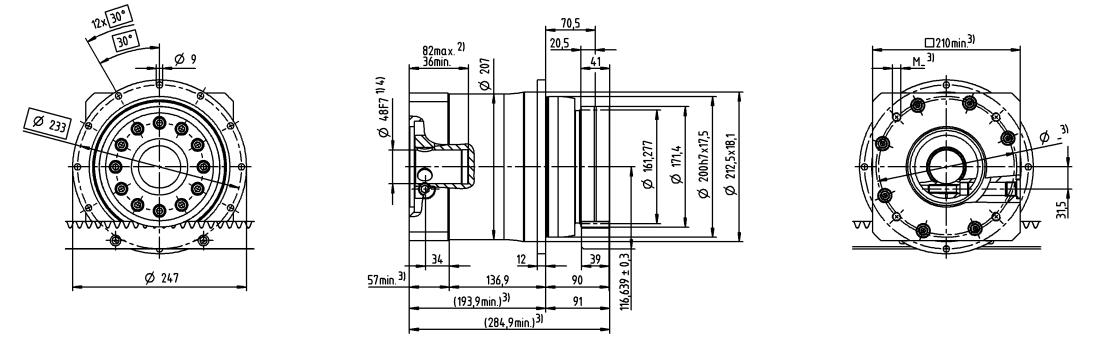

Non-tolerated dimensions are nominal dimensions
Detailed rack dimensions starting on page 161

[1] Check motor shaft fit
[2] Min./Max. permissible motor shaft length. Longer motor shafts are possible, please contact alpha.
[3] The dimensions depend on the motor
[4] Smaller motor shaft diameter is compensated by a bushing with a minimum thickness of 1 mm

Planetary gearbox TP+ 025 MA with rack module 2 and pinion RMW module 2

System	Max. feed force [1] F_{2T}		4200 N	
	Max. feed speed [2] v_{max}		45 m/min	15 m/min
Gearbox	No. of stages		2	3
	Ratios *i*		22 / 27.5 / 38.5 / 55	66 / 88 / 110 / 154 / 220
	Clamping hub diameter		19 / 24 mm	19 mm
	Designation		TP 025S-MA2-_ _ _-3_ _	TP 025S-MA3-_ _ _-3_ _
Pinion	Module *m*		2 mm	
	Number of teeth *z*		20	
	Pitch circle diameter *d*		42.441 mm	
	Profile correction factor *x*		0.4	
	Helix angle *ß*		-19.5283° (left-handed)	
	Designation		RMW 200-444-20L1-037	
Rack	Module *m*		2 mm	
	Length L (options)		1000 mm (2000 mm; 500 mm)	
	Helix angle *ß*		19.5283° (right-handed)	
	Designation		ZST 200-332-1000-R1; optionally with INIRA®	
Lubrication system [3]	Set consisting of lubrication pinion and axis for	Rack	LMT 200-PU -18L1-024-1	
		Pinion	LMT 200-PU -18R1-024-1	
	Lubricator	125 cm³	LUC+125-0511-02	
		400 cm³	LUC+400-0511-02	
	Lubricant		WITTENSTEIN alpha G11	

[1] Maximum feed force depending on ratio and number of stages
[2] Calculation with lowest ratio and maximum input speed
[3] Impulse-controlled basic version with one output and 2 m hose. See page 118 for further information on the lubrication system.
Application-specific dimensioning with cymex® – www.wittenstein-cymex.com

Alternative system solutions

Pinion			Axis distance	TP+ 025S HIGH TORQUE	TPM+ 025 HIGH TORQUE	TPK+ 025S HIGH TORQUE	Rack*
Designation	*d* [mm]	*x* [ ]	*A* [mm]	F_{2T} [N]	F_{2T} [N]	F_{2T} [N]	Designation
RMW 200-444-20L1-037	42.441	0.4	44.021	4200	4200	4200	ZST 200-332-1000-R1; optionally with INIRA®
RMW 300-444-20L1-055	63.662	0.4	59.031	4050	4050	4050	ZST 300-332-1000-R1; optionally with INIRA®
RMF 200-443-40L1-063-12xM8	84.883	0.3	65.041	4500	4500	4500	ZST 200-332-1000-R1; optionally with INIRA®

d = Pitch circle diameter
x = Addendum modification coefficient
A = Distance between pinion axle and rear surface of rack
F_{2T} = Maximum feed force depending on ratio and number of stages
Application-specific dimensioning with cymex® – www.wittenstein-cymex.com
* Other length options available

Motor shaft diameter [mm]

2-stage

up to 19 [4] (E) clamping hub diameters

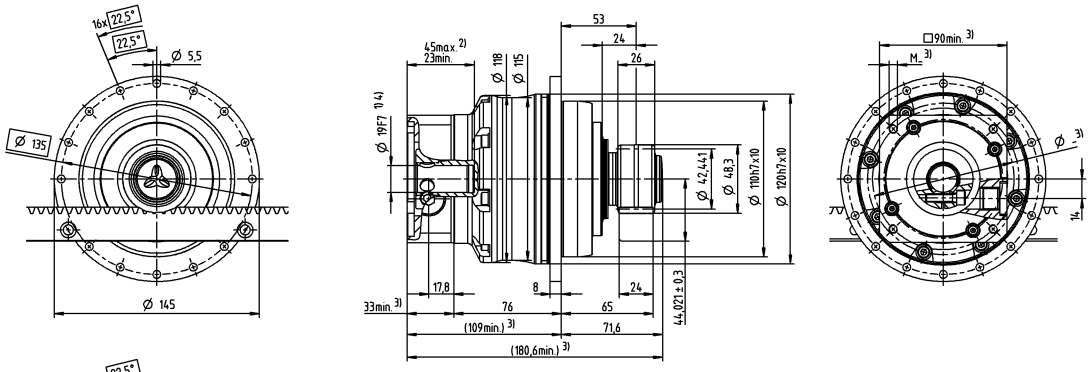

up to 24 [4] (G) clamping hub diameters

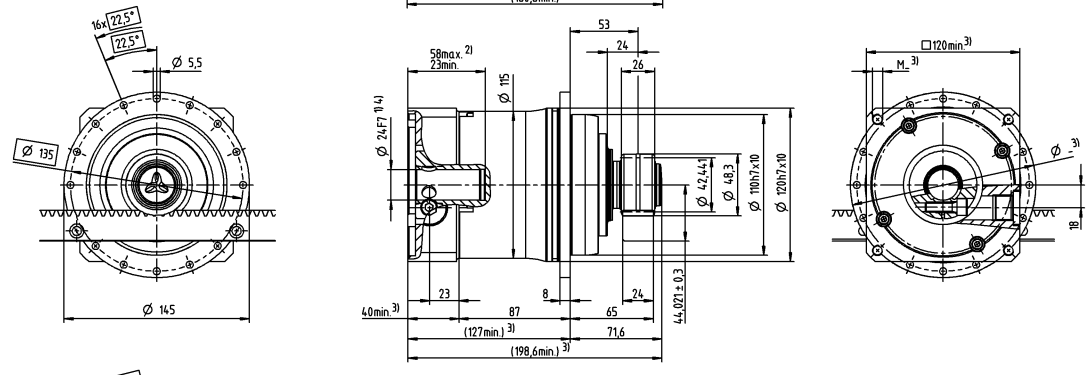

3-stage

up to 19 [4] (E) clamping hub diameters

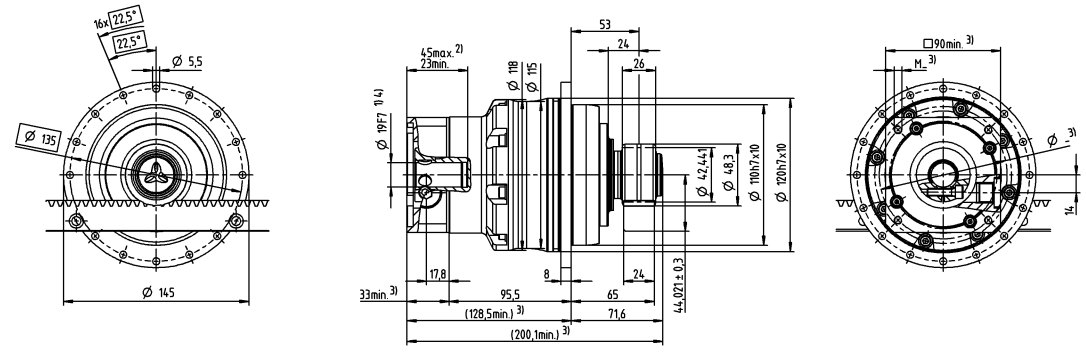

Non-tolerated dimensions are nominal dimensions
Detailed rack dimensions starting on page 161

[1] Check motor shaft fit
[2] Min./Max. permissible motor shaft length. Longer motor shafts are possible, please contact alpha.
[3] The dimensions depend on the motor
[4] Smaller motor shaft diameter is compensated by a bushing with a minimum thickness of 1 mm

Planetary gearbox TP+ 050 MA with rack module 3 and pinion RMW module 3

System	Max. feed force [1] F_{2T}		10900 N	
	Max. feed speed [2] v_{max}		57 m/min	19 m/min
Gearbox	No. of stages		2	3
	Ratios *i*		22 / 27.5 / 38.5 / 55	66 / 88 / 110 / 154 / 220
	Clamping hub diameter		24 / 38 mm	24 mm
	Designation		TP 050S-MA2-_ _ _-3_ _	TP 050S-MA3-_ _ _-3_ _
Pinion	Module *m*		3 mm	
	Number of teeth *z*		20	
	Pitch circle diameter *d*		63.662 mm	
	Profile correction factor *x*		0.4	
	Helix angle *ß*		-19.5283° (left-handed)	
	Designation		RMW 300-444-20L1-055	
Rack	Module *m*		3 mm	
	Length L (options)		1000 mm (2000 mm; 500 mm)	
	Helix angle *ß*		19.5283° (right-handed)	
	Designation		ZST 300-332-1000-R1; optionally with INIRA®	
Lubrication system [3]	Set consisting of lubrication pinion and axis for	Rack	LMT 300-PU -18L1-030-1	
		Pinion	LMT 300-PU -18R1-030-1	
	Lubricator	125 cm³	LUC+125-0511-02	
		400 cm³	LUC+400-0511-02	
	Lubricant		WITTENSTEIN alpha G11	

[1] Maximum feed force depending on ratio and number of stages
[2] Calculation with lowest ratio and maximum input speed
[3] Impulse-controlled basic version with one output and 2 m hose. See page 118 for further information on the lubrication system.
Application-specific dimensioning with cymex® – www.wittenstein-cymex.com

Alternative system solutions

Pinion			Axis distance	TP+ 050S HIGH TORQUE	TPM+ 050 HIGH TORQUE	TPK+ 050S HIGH TORQUE	Rack*
Designation	*d* [mm]	*x* [ ]	*A* [mm]	F_{2T} [N]	F_{2T} [N]	F_{2T} [N]	Designation
RMW 300-444-20L1-055	63.662	0.4	59.031	10900	10900	10900	ZST 300-332-1000-R1; optionally with INIRA®
RMW 400-444-20L1-073	84.882	0.2	78.241	10300	10300	10300	ZST 400-332-1000-R1; optionally with INIRA®
RMF 300-443-35L1-080-12xM10	111.409	0.3	82.604	11800	11800	11800	ZST 300-332-1000-R1; optionally with INIRA®
RMF 300-443-40L1-080-12xM10	127.324	0.3	90.562	11700	11700	11700	ZST 300-332-1000-R1; optionally with INIRA®

d = Pitch circle diameter
x = Addendum modification coefficient
A = Distance between pinion axle and rear surface of rack
F_{2T} = Maximum feed force depending on ratio and number of stages
Application-specific dimensioning with cymex® – www.wittenstein-cymex.com
* Other length options available

Motor shaft diameter [mm]

2-stage

up to 24 [4] (G) clamping hub diameters

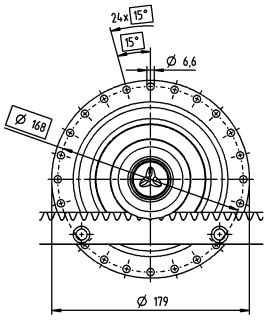

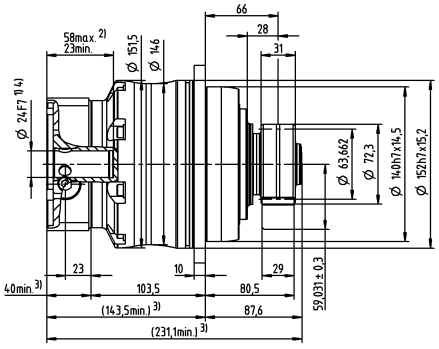

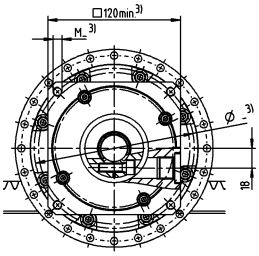

up to 38 [4] (K) clamping hub diameters

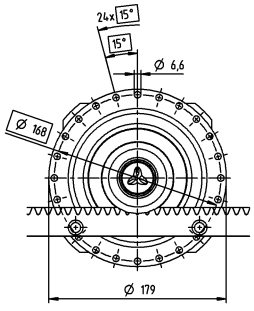

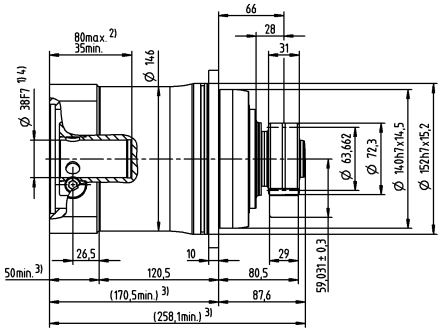

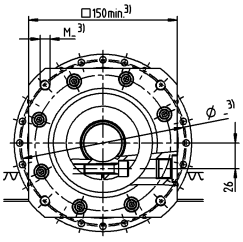

3-stage

up to 24 [4] (G) clamping hub diameters

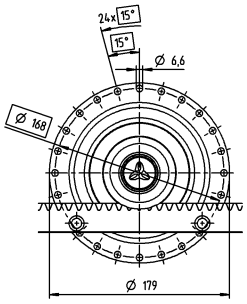

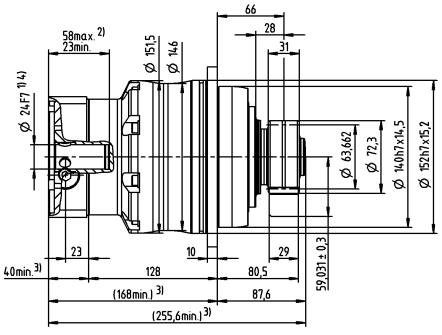

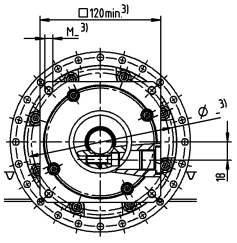

Non-tolerated dimensions are nominal dimensions
Detailed rack dimensions starting on page 161

[1] Check motor shaft fit
[2] Min./Max. permissible motor shaft length. Longer motor shafts are possible, please contact alpha.
[3] The dimensions depend on the motor
[4] Smaller motor shaft diameter is compensated by a bushing with a minimum thickness of 1 mm

Planetary gearbox TP+ 110 MA with rack module 4 and pinion RMW module 4

System	Max. feed force [1] F_{2T}		21000 N	
	Max. feed speed [2] v_{max}		68 m/min	23 m/min
Gearbox	No. of stages		2	3
	Ratios *i*		22 / 27.5 / 38.5 / 55	66 / 88 / 110 / 154 / 220
	Clamping hub diameter		38 / 48 mm	38 mm
	Designation		TP 110S-MA2-_ _ _-3_ _	TP 110S-MA3-_ _ _-3_ _
Pinion	Module *m*		4 mm	
	Number of teeth *z*		20	
	Pitch circle diameter *d*		84.883 mm	
	Profile correction factor *x*		0.2	
	Helix angle *ß*		-19.5283° (left-handed)	
	Designation		RMW 400-444-20L1-073	
Rack	Module *m*		4 mm	
	Length L (options)		1000 mm (2000 mm, 493 mm)	
	Helix angle *ß*		19.5283° (right-handed)	
	Designation		ZST 400-332-1000-R15; optionally with INIRA®	
Lubrication system [3]	Set consisting of lubrication pinion and axis for	Rack	LMT 400-PU -18L1-040-1	
		Pinion	LMT 400-PU -18R1-040-1	
	Lubricator	125 cm^3	LUC+125-0511-02	
		400 cm^3	LUC+400-0511-02	
	Lubricant		WITTENSTEIN alpha G11	

[1] Maximum feed force depending on ratio and number of stages
[2] Calculation with lowest ratio and maximum input speed
[3] Impulse-controlled basic version with one output and 2 m hose. See page 118 for further information on the lubrication system.
Application-specific dimensioning with cymex® – www.wittenstein-cymex.com

Alternative system solutions

Pinion			Axis distance	TP⁺ 110S HIGH TORQUE	TPM⁺ 110 HIGH TORQUE	TPK⁺ 110S HIGH TORQUE	Rack*
Designation	*d* [mm]	*x* [ ]	*A* [mm]	F_{2T} [N]	F_{2T} [N]	F_{2T} [N]	Designation
RMW 400-444-20L1-073	84.882	0.2	78.241	21000	21000	21000	ZST 400-332-1000-R15; optionally with INIRA®
RMW 500-444-19L1-089	100.798	0.4	86.399	20000	20000	20000	ZST 500-332-1000-R1; optionally with INIRA®
RMF 400-443-40L1-125-12xM12	169.766	0	119.883	21700	21700	21700	ZST 400-332-1000-R15; optionally with INIRA®

d = Pitch circle diameter
x = Addendum modification coefficient
A = Distance between pinion axle and rear surface of rack
F_{2T} = Maximum feed force depending on ratio and number of stages
Application-specific dimensioning with cymex® – www.wittenstein-cymex.com
* Other length options available

Motor shaft diameter [mm]

2-stage

up to 38 [4] (K) clamping hub diameters

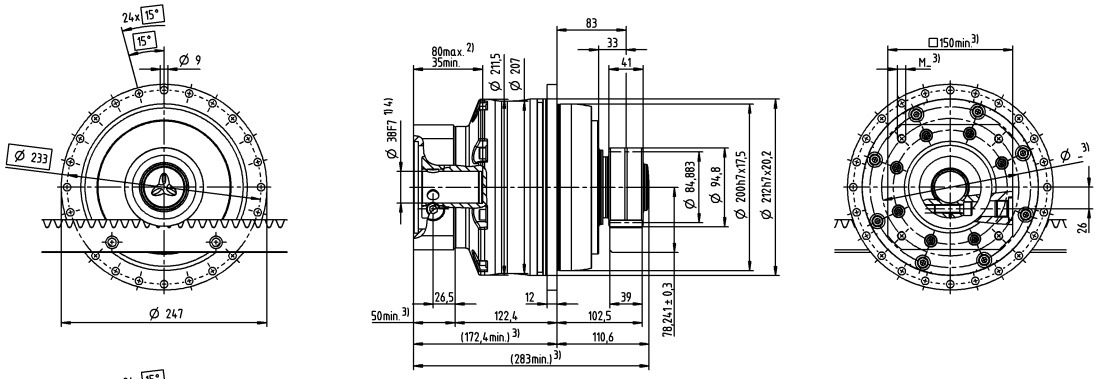

up to 48 [4] (M) clamping hub diameters

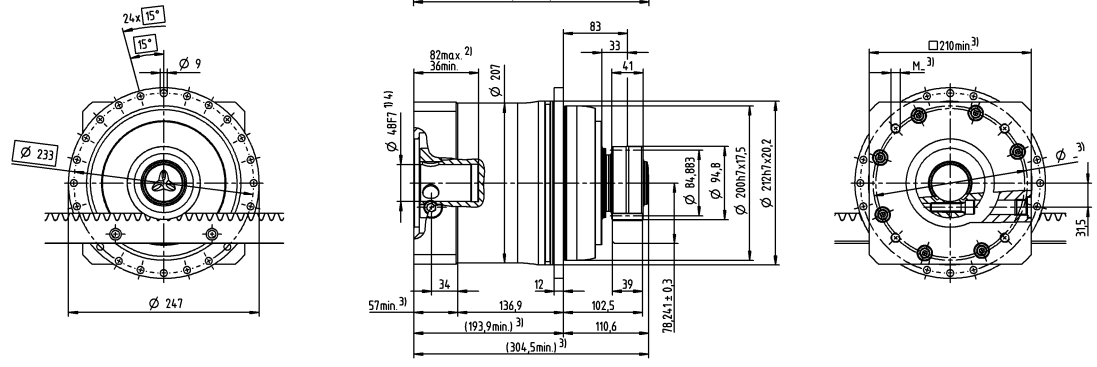

3-stage

up to 38 [4] (K) clamping hub diameters

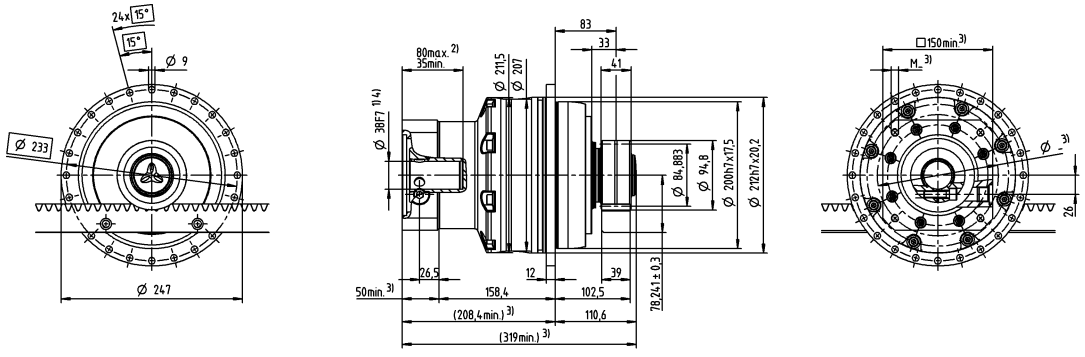

Non-tolerated dimensions are nominal dimensions
Detailed rack dimensions starting on page 161

[1] Check motor shaft fit
[2] Min./Max. permissible motor shaft length. Longer motor shafts are possible, please contact alpha.
[3] The dimensions depend on the motor
[4] Smaller motor shaft diameter is compensated by a bushing with a minimum thickness of 1 mm

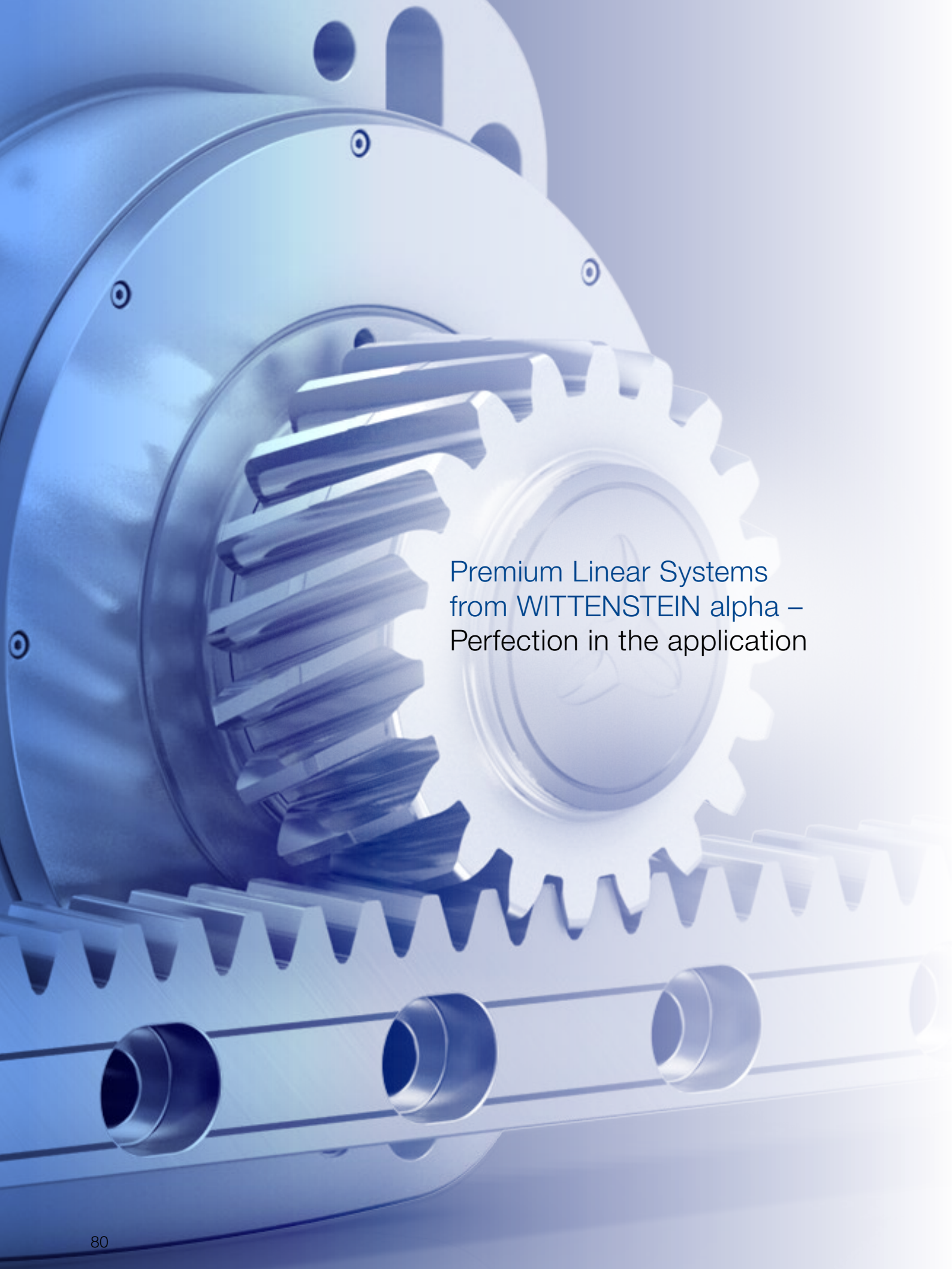

Premium Linear Systems
from WITTENSTEIN alpha –
Perfection in the application

Premium Linear Systems – the perfect solution for linear feed drives in machine tools and highly dynamic automation solutions

The Premium Linear System with **XP**⁺ and associated right-angle and servo actuator versions is used predominantly as a single drive within a range of up to 10,700 N/drive.

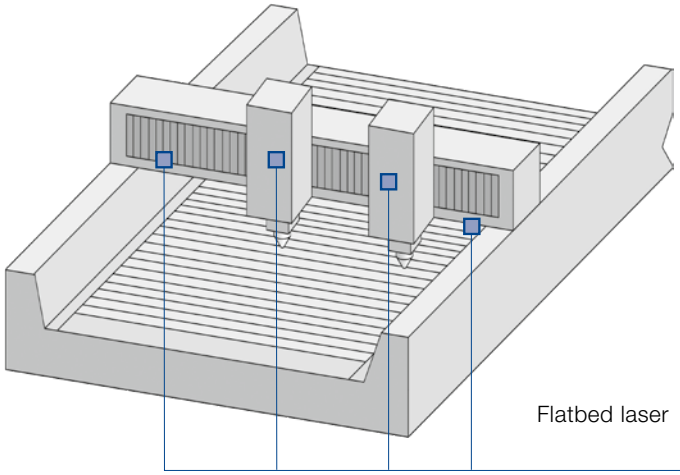

Flatbed laser

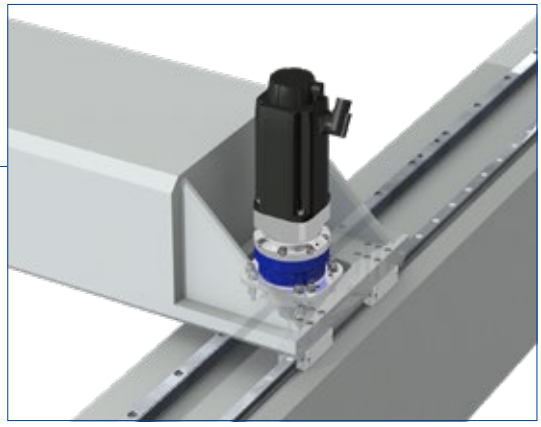

The Premium Linear System with **RP**⁺ and associated right-angle and servo actuator versions is mostly used in an electrically braced master/slave configuration in machine tools, allowing feed forces of up to 113,000 N/drive.

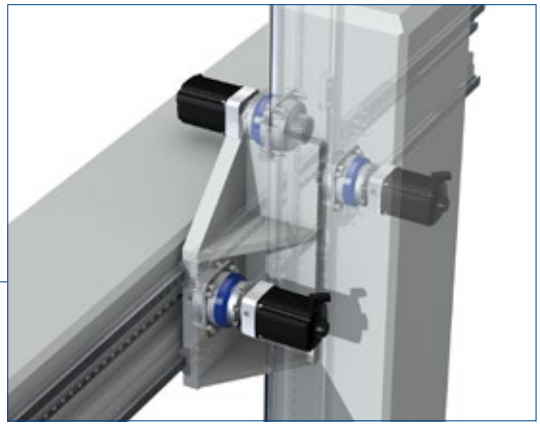

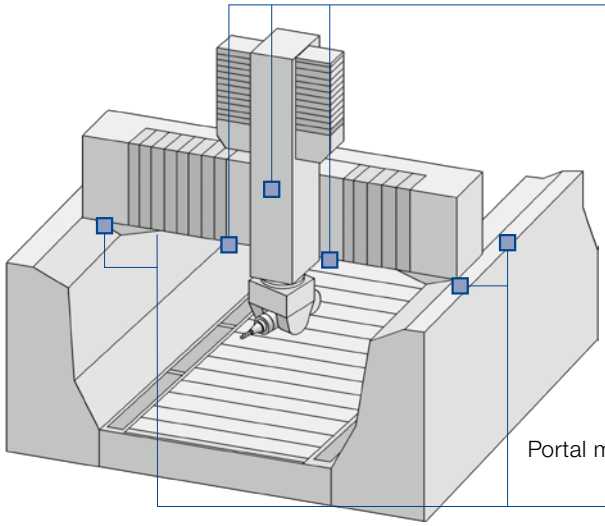

Portal milling machine

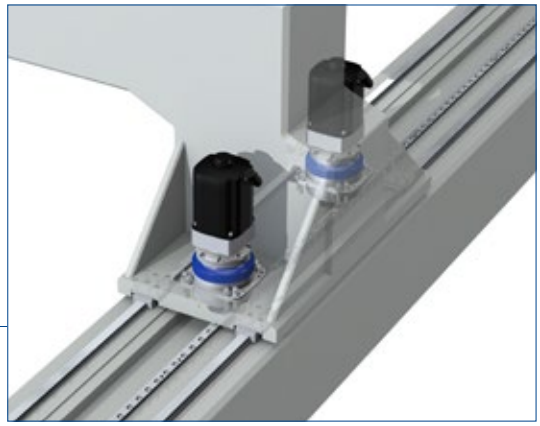

New dimensions in performance

With the Premium Linear System, the performance of the rack and pinion system reaches a new dimension. While others are still busy adapting existing solutions, WITTENSTEIN alpha has stayed several steps ahead with the improved new linear systems. The innovative Premium Linear Systems are used in applications where the individual requirements far exceed what has previously been possible. Compared to the industry standard, the values have been improved by 150 % on average.

Your benefits in comparison to the industry standard

150 % Greater feed force
100 % Higher power density
50 % Greater system reliability
50 % Less mounting effort
15 % Greater positioning accuracy

	Premium Linear System	Max. feed force [N]	Max. feed speed [m/min]
with XP+	**PLS 5**	5450	333
	PLS 8	8350	244
	PLS 11	10700	333
with RP+	**PLS 10**	9750	133
	PLS 13	12900	200
	PLS 20	20300	250
	PLS 22	22300	104
	PLS 36	36100	112
	PLS 47	47000	135
	PLS 75	75000	91
	PLS 112	112000	111

Feed force and feed speed dependent on ratio



XP+



RP+

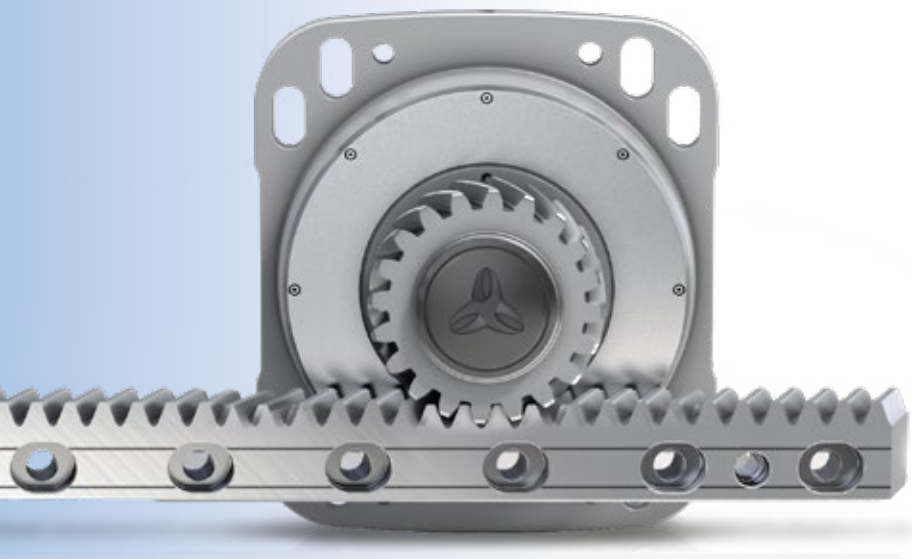

Quick system selection

XP+ RP+

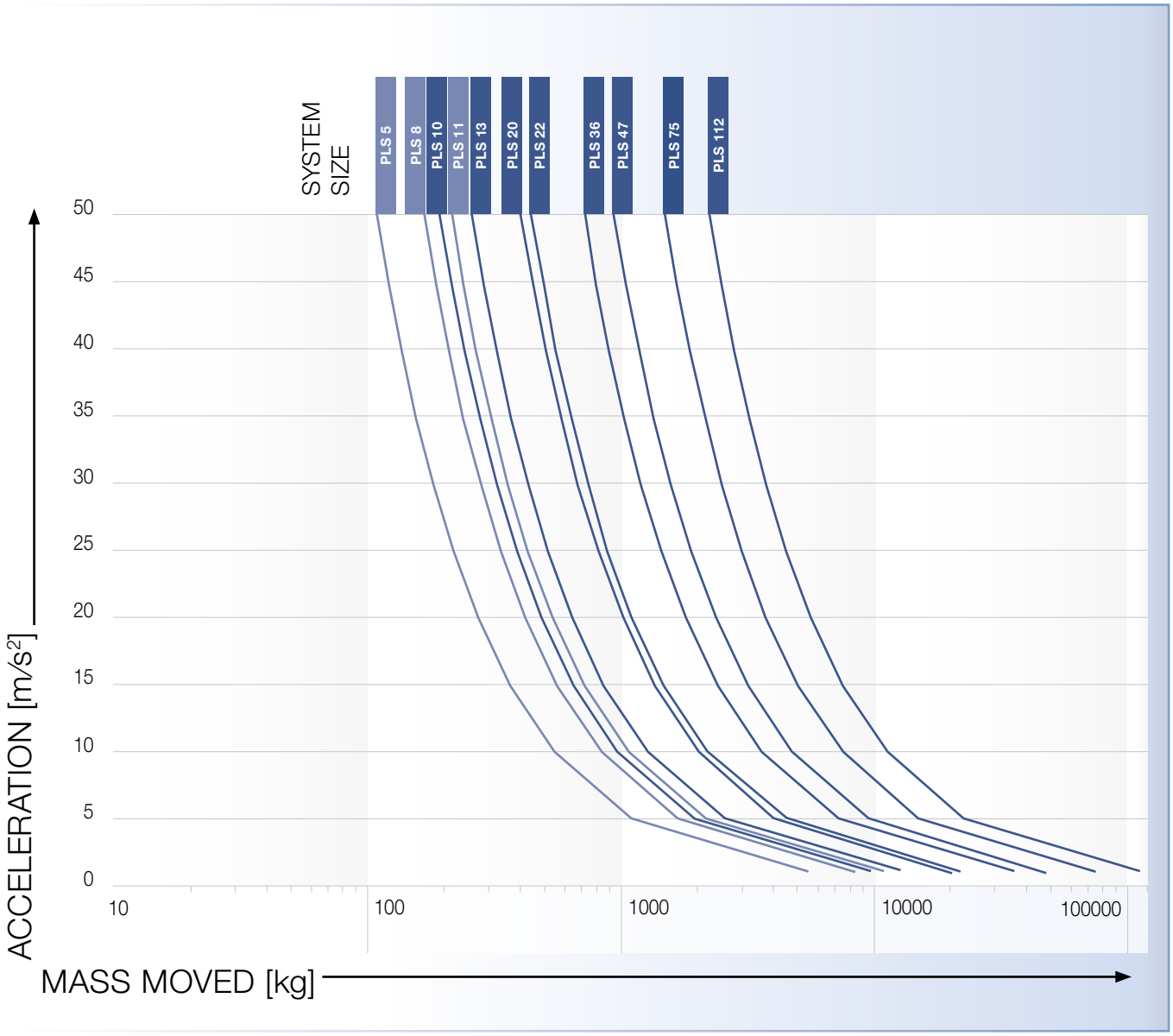

Premium Linear Systems overview

Our preferred linear systems are always comprised of the perfect combination of gearbox, pinion, rack and lubrication system. The systems are optimized to achieve the required feed force, feed speed, rigidity and degree of utilization of the individual components. Depending on your individual requirements, you have the option to further configure products via the ordering code. For a detailed dimensioning and configuration of the products we recommend to use cymex® 5.

System	Gearbox	Pinion	Rack*
PLS 5	XP+ 020R	RMW 200-444-20L1-033	ZST 200-333-1000-R1
PLS 8	XP+ 030R	RMW 200-444-20L1-037	ZST 200-334-1000-R1
PLS 11	XP+ 040R	RMW 300-444-20L1-055	ZST 300-333-1000-R1
PLS 10	RP+ 030S	RMW 200-444-20L1-037	ZST 200-334-1000-R11
PLS 13	RP+ 030S	RMW 300-444-20L1-055	ZST 300-334-1000-R11
PLS 20	RP+ 040S	RMW 300-444-20L1-055	ZST 300-334-1000-R11
PLS 22	RP+ 040S	RMW 400-444-20L1-073	ZST 400-334-1000-R11
PLS 36	RP+ 050S	RMW 400-444-24L1-089	ZST 400-334-1000-R11
PLS 47	RP+ 050S	RMW 500-444-23L1-106	ZST 500-334-1000-R11
PLS 75	RP+ 060S	RMW 600-444-23L1-128	ZST 600-334-1000-R11
PLS 112	RP+ 080S	RMW 800-444-21L1-156	ZST 800-334-960-R11

* Other length options available

Assembly accessories can be found starting at page 133 and information on the lubrication system starting at page 118

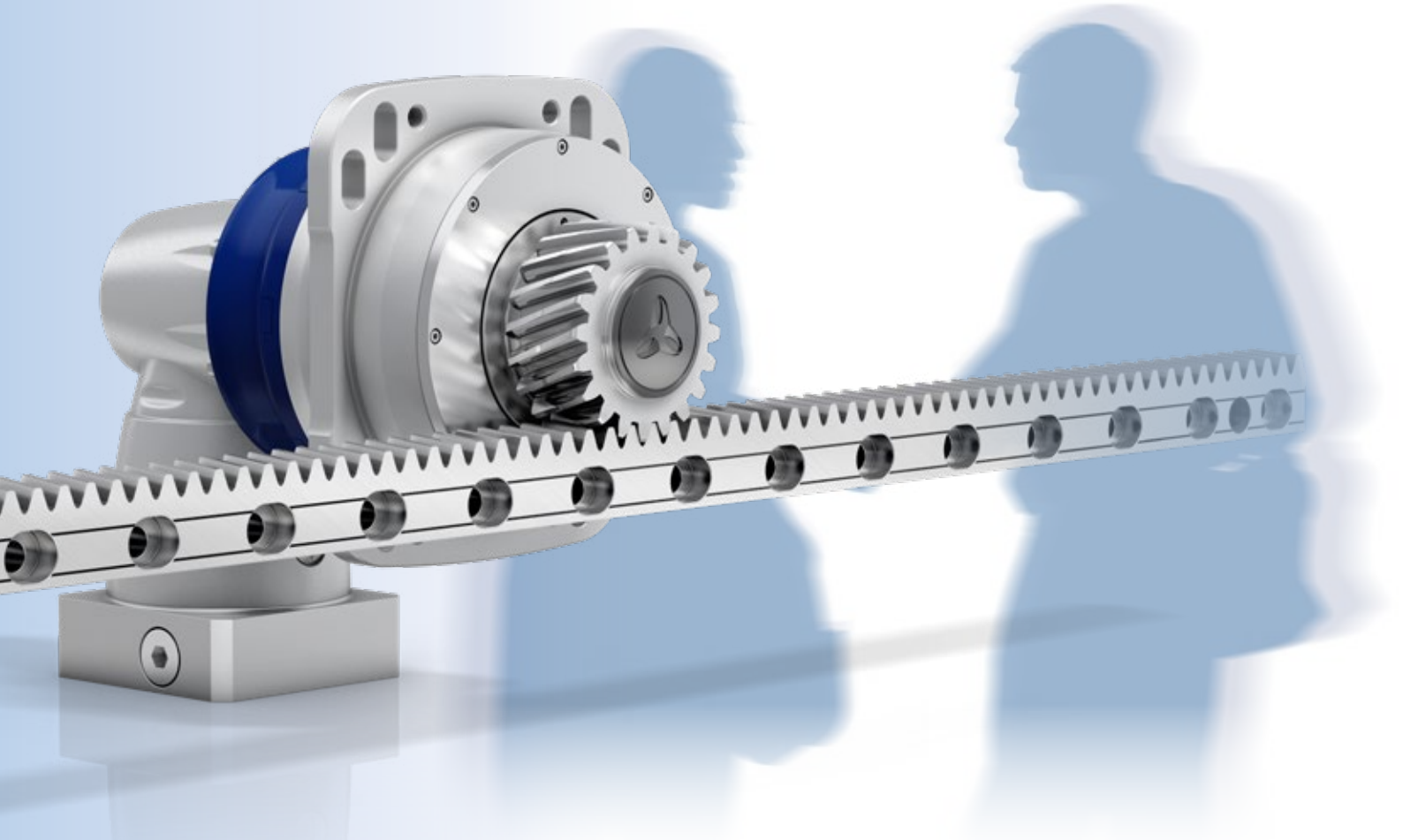

Ordering code

Gearbox*

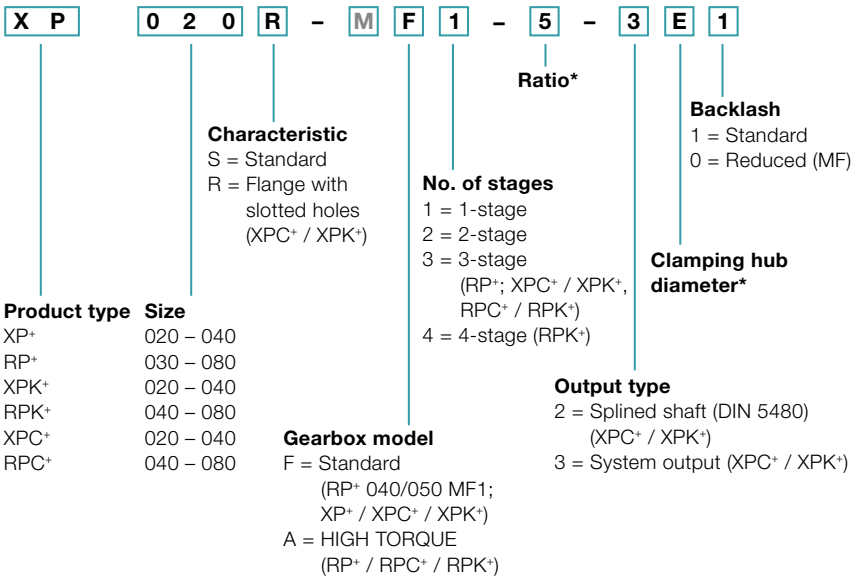

M Components with a gray font cannot be selected

* Further information about the gearboxes can be obtained from the respective catalogs, online at www.wittenstein-alpha.com or on request

** Full motor designation only required to determine gearbox mounting parts

Rack

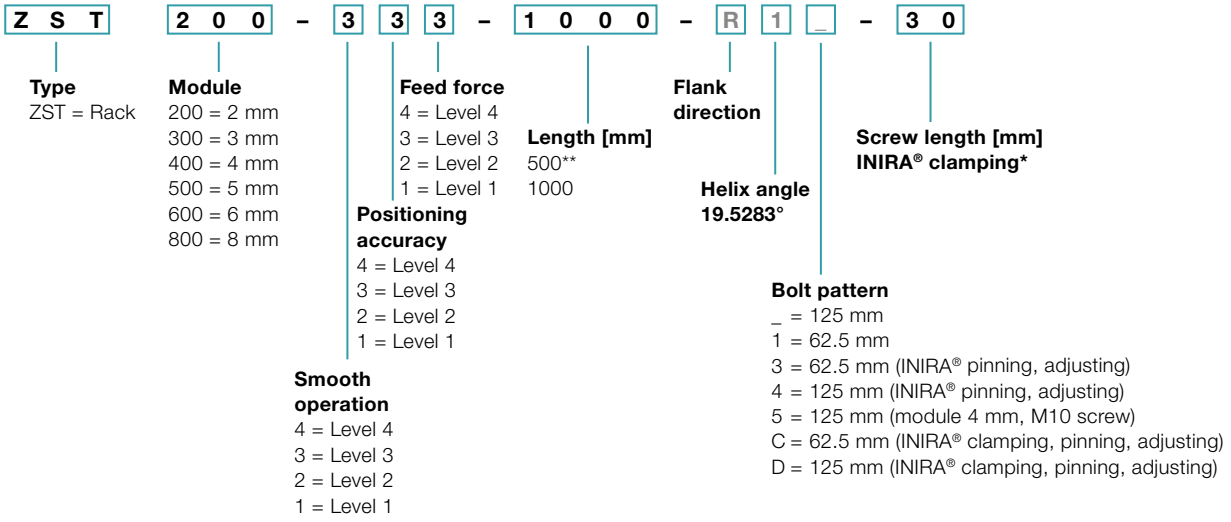

* Please refer to page 134 for an overview of available screw lengths

* Module 4, 493 mm

Pinion

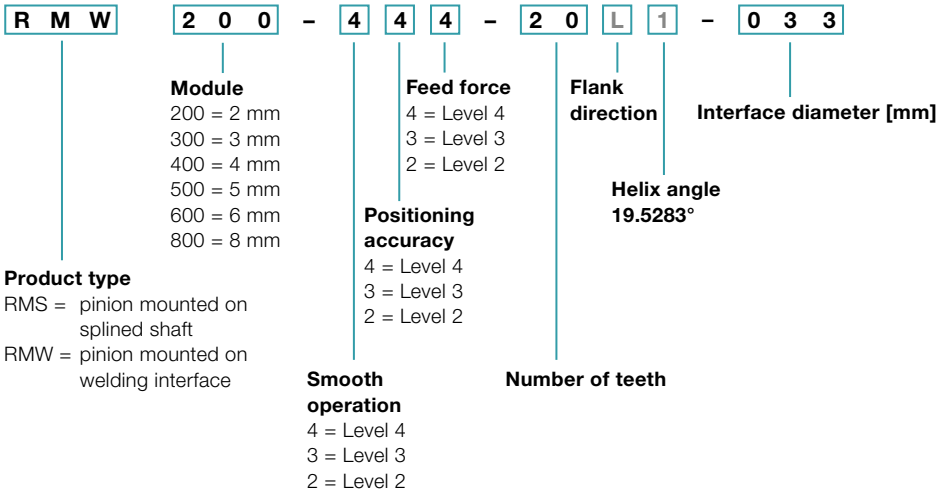

Planetary gearbox XP+ 020R MF with rack module 2 and pinion RMW module 2

System	Max. feed force [1] F_{2T}		5450 N	
	Max. feed speed [2] v_{max}		333 m/min	71 m/min
Gearbox	No. of stages		1	2
	Ratios *i*		3 / 4 / 5 / 7 / 8 / 10	16 / 20 / 25 / 28 / 32 / 35 / 40 / 50 / 64 / 70 / 100
	Clamping hub diameter		14 / 24 mm	11 / 19 mm
	Designation		XP 020R-MF1-_ _ _-3_ _	XP 020R-MF2-_ _ _-3_ _
Pinion	Module *m*		2 mm	
	Number of teeth *z*		20	
	Pitch circle diameter *d*		42.441 mm	
	Profile correction factor *x*		0.4	
	Helix angle *ß*		-19.5283° (left-handed)	
	Designation		RMW 200-444-20L1-033	
Rack	Module *m*		2 mm	
	Length L (options)		1000 mm (500 mm)	
	Helix angle *ß*		19.5283° (right-handed)	
	Designation		ZST 200-333-1000-R1; optionally with INIRA®	
Lubrication system [3]	Set consisting of lubrication pinion and axis for	Rack	LMT 200-PU -18L1-024-1	
		Pinion	LMT 200-PU -18R1-024-1	
	Lubricator	125 cm³	LUC+125-0511-02	
		400 cm³	LUC+400-0511-02	
	Lubricant		WITTENSTEIN alpha G11	

[1] Maximum feed force depending on ratio and number of stages
[2] Calculation with lowest ratio and maximum input speed
[3] Impulse-controlled basic version with one output and 2 m hose. See page 118 for further information on the lubrication system.
Application-specific dimensioning with cymex® – www.wittenstein-cymex.com

Alternative system solutions

Pinion			Axis distance	XP+ 020R	PHG 2R	XPC+ 020R	XPK+ 020R	Rack*
Designation	*d* [mm]	*x* [ ]	*A* [mm]	F_{2T} [N]	F_{2T} [N]	F_{2T} [N]	F_{2T} [N]	Designation
RMW 200-444-20L1-033	42.441	0.4	44.021	5450	5450	5450	5450	ZST 200-333-1000-R1; optionally with INIRA®
RMS 200-323-18L1-022	38.197	0.4	41.899	5400	5400	5400	5400	ZST 200-333-1000-R1; optionally with INIRA®
RMS 200-323-20L1-022	42.441	0.4	44.021	5300	5300	5300	5300	ZST 200-333-1000-R1; optionally with INIRA®
RMS 200-323-22L1-022	46.686	0.4	46.143	5100	5100	5100	5100	ZST 200-333-1000-R1; optionally with INIRA®

d = Pitch circle diameter
x = Addendum modification coefficient
A = Distance between pinion axle and rear surface of rack
F_{2T} = Maximum feed force depending on ratio and number of stages
Application-specific dimensioning with cymex® – www.wittenstein-cymex.com
* Other length options available

Motor shaft diameter [mm]

1-stage

greater than 14 (C) up to 19 [4] (E) clamping hub diameters

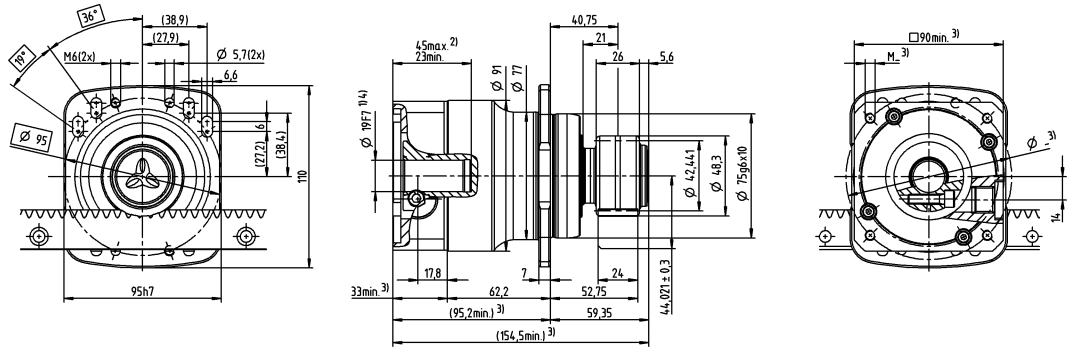

up to 24 [4] (G) clamping hub diameters

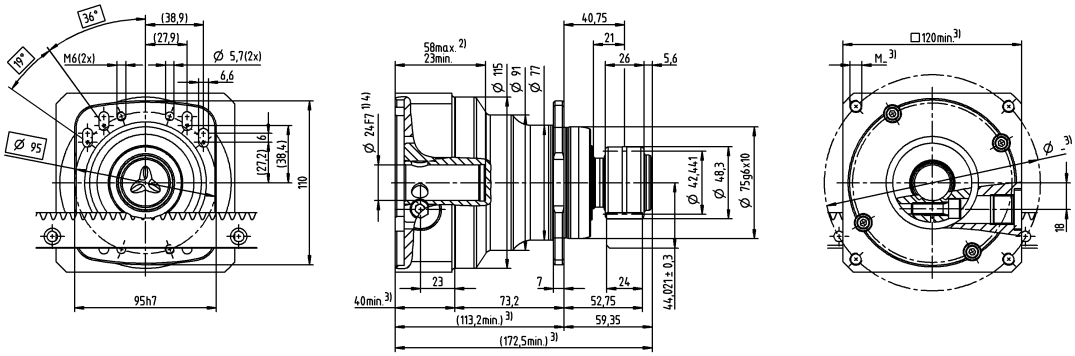

2-stage

greater than 11 (B) up to 14 [4] (C) clamping hub diameters

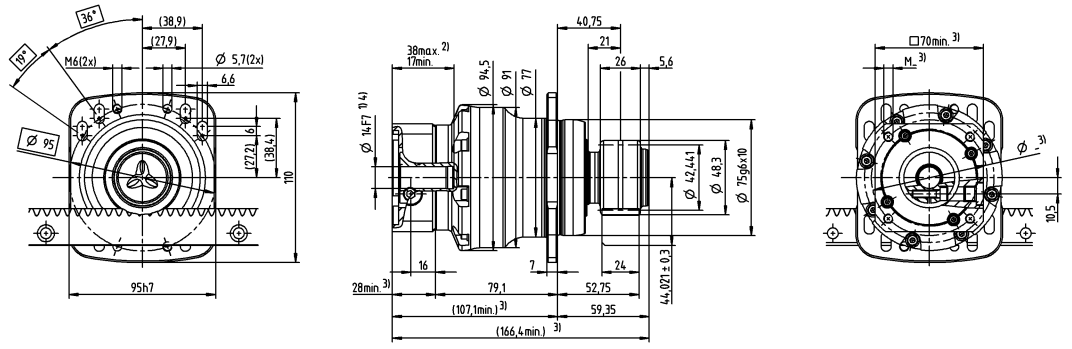

up to 19 [4] (E) clamping hub diameters

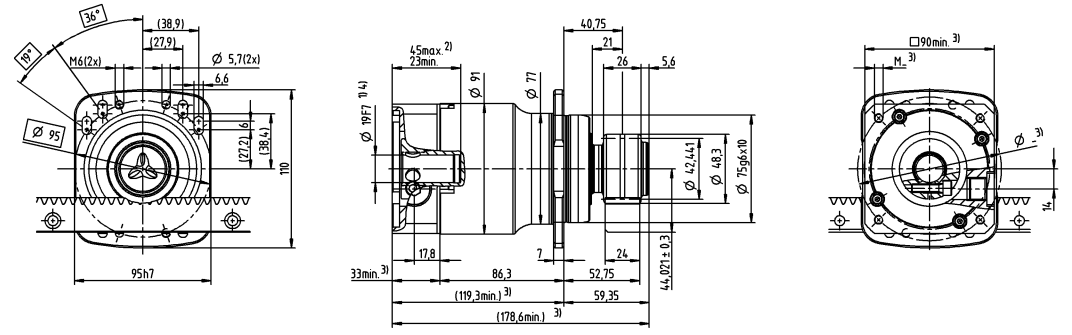

Non-tolerated dimensions are nominal dimensions
Detailed rack dimensions starting on page 161

[1] Check motor shaft fit
[2] Min./Max. permissible motor shaft length. Longer motor shafts are possible, please contact alpha.
[3] The dimensions depend on the motor
[4] Smaller motor shaft diameter is compensated by a bushing with a minimum thickness of 1 mm

Planetary gearbox XP+ 030R MF with rack module 2 and pinion RMW module 2

System	Max. feed force [1] F_{2T}		8350 N	
	Max. feed speed [2] v_{max}		244 m/min	54 m/min
Gearbox	No. of stages		1	2
	Ratios *i*		3 / 4 / 5 / 7 / 8 / 10	16 / 20 / 25 / 28 / 32 / 35 / 40 / 50 / 64 / 70 / 100
	Clamping hub diameter		19 / 24 / 28 / 38 mm	14 / 19 / 24 / 28 mm
	Designation		XP 030R-MF1-_ _-3_ _	XP 030R-MF2-_ _-3_ _
Pinion	Module *m*		2 mm	
	Number of teeth *z*		20	
	Pitch circle diameter *d*		42.441 mm	
	Profile correction factor *x*		0.4	
	Helix angle *ß*		-19.5283° (left-handed)	
	Designation		RMW 200-444-20L1-037	
Rack	Module *m*		2 mm	
	Length L (options)		1000 mm (500 mm)	
	Helix angle *ß*		19.5283° (right-handed)	
	Designation		ZST 200-334-1000-R11; optionally with INIRA®	
Lubrication system [3]	Set consisting of lubrication pinion and axis for	Rack	LMT 200-PU -18L1-024-1	
		Pinion	LMT 200-PU -18R1-024-1	
	Lubricator	125 cm³	LUC+125-0511-02	
		400 cm³	LUC+400-0511-02	
	Lubricant		WITTENSTEIN alpha G11	

[1] Maximum feed force depending on ratio and number of stages
[2] Calculation with lowest ratio and maximum input speed
[3] Impulse-controlled basic version with one output and 2 m hose. See page 118 for further information on the lubrication system.
Application-specific dimensioning with cymex® – www.wittenstein-cymex.com

Alternative system solutions

Pinion			Axis distance	XP+ 030R	PHG 3R	XPC+ 030R	XPK+ 030R	Rack*
Designation	*d* [mm]	*x* [ ]	*A* [mm]	F_{2T} [N]	F_{2T} [N]	F_{2T} [N]	F_{2T} [N]	Designation
RMW 200-444-20L1-037	42.441	0.4	44.021	8350	8350	8350	8350	ZST 200-334-1000-R11; optionally with INIRA®
RMW 200-444-40L1-037	84.883	0	65.041	6080	6080	6080	6080	ZST 200-332-1000-R1; optionally with INIRA®
RMW 300-444-20L1-037	63.662	0.4	59.031	7200	7200	7200	7200	ZST 300-332-1000-R1; optionally with INIRA®
RMS 200-323-23L1-032	48.808	0.4	47.204	8350	8350	8350	8350	ZST 200-334-1000-R11; optionally with INIRA®
RMS 200-323-25L1-032	53.052	0.4	49.326	8350	8350	8350	8350	ZST 200-334-1000-R11; optionally with INIRA®
RMS 200-323-27L1-032	57.296	0.3	51.248	8350	8350	8350	8350	ZST 200-334-1000-R11; optionally with INIRA®

d = Pitch circle diameter
x = Addendum modification coefficient
A = Distance between pinion axle and rear surface of rack
F_{2T} = Maximum feed force depending on ratio and number of stages
Application-specific dimensioning with cymex® – www.wittenstein-cymex.com
* Other length options available

Motor shaft diameter [mm]

1-stage

greater than 19 (E)
up to 24/28 [4] (G/H)
clamping hub
diameters

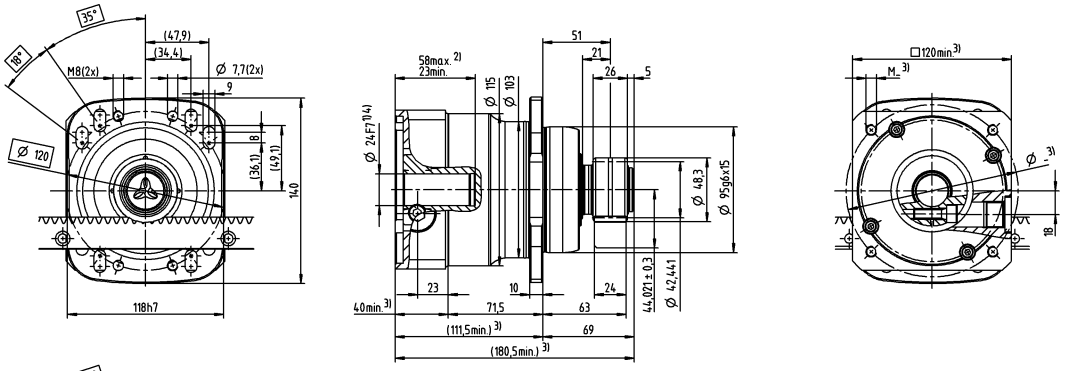

up to 38 [4] (K)
clamping hub
diameters

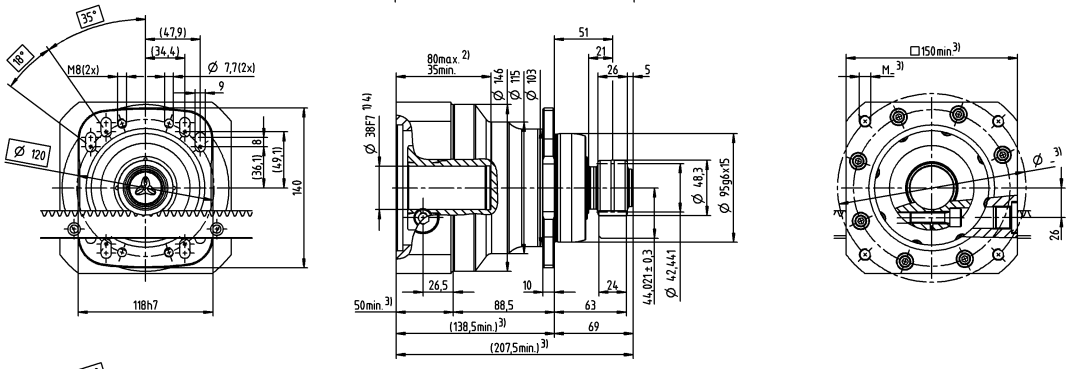

2-stage

greater than 14 (C)
up to 19 [4] (E)
clamping hub
diameters

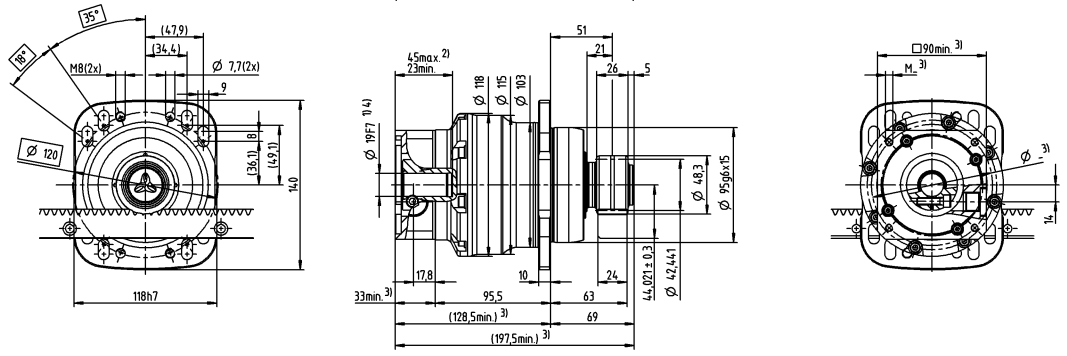

up to 28 [4] (G)
clamping hub
diameters

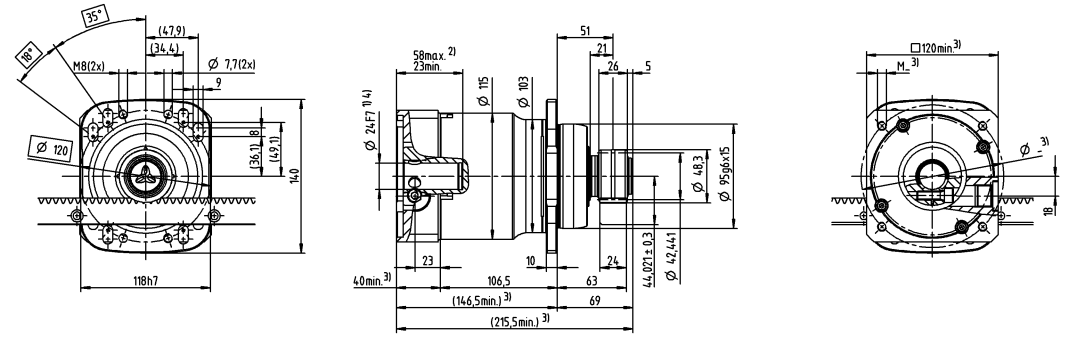

Non-tolerated dimensions are nominal dimensions
Detailed rack dimensions starting on page 161

[1] Check motor shaft fit
[2] Min./Max. permissible motor shaft length. Longer motor shafts are possible, please contact alpha.
[3] The dimensions depend on the motor
[4] Smaller motor shaft diameter is compensated by a bushing with a minimum thickness of 1 mm

Planetary gearbox XP+ 040R MF with rack module 3 and pinion RMW module 3

System	Max. feed force [1] F_{2T}		10700 N	
	Max. feed speed [2] v_{max}		333 m/min	75 m/min
Gearbox	No. of stages		1	2
	Ratios *i*		3 / 4 / 5 / 7 / 8 / 10	16 / 20 / 25 / 28 / 32 / 35 / 40 / 50 / 64 / 70 / 100
	Clamping hub diameter		24 / 32 / 38 / 48 mm	19 / 24 / 38 mm
	Designation		XP 040R-MF1-_ _-3_ _	XP 040R-MF2-_ _-3_ _
Pinion	Module *m*		3 mm	
	Number of teeth *z*		20	
	Pitch circle diameter *d*		63.662 mm	
	Profile correction factor *x*		0.4	
	Helix angle *ß*		-19.5283° (left-handed)	
	Designation		RMW 300-444-20L1-055	
Rack	Module *m*		3 mm	
	Length L (options)		1000 mm (500 mm)	
	Helix angle *ß*		19.5283° (right-handed)	
	Designation		ZST 300-333-1000-R1; optionally with INIRA®	
Lubrication system [3]	Set consisting of lubrication pinion and axis for	Rack	LMT 300-PU -18L1-030-1	
		Pinion	LMT 300-PU -18R1-030-1	
	Lubricator	125 cm³	LUC+125-0511-02	
		400 cm³	LUC+400-0511-02	
	Lubricant		WITTENSTEIN alpha G11	

[1] Maximum feed force depending on ratio and number of stages
[2] Calculation with lowest ratio and maximum input speed
[3] Impulse-controlled basic version with one output and 2 m hose. See page 118 for further information on the lubrication system.
Application-specific dimensioning with cymex® – www.wittenstein-cymex.com

Alternative system solutions

Pinion			Axis distance	XP+ 040R	XPK+ 040R	XPC+ 040R	Rack*
Designation	*d* [mm]	*x* [ ]	*A* [mm]	F_{2T} [N]	F_{2T} [N]	F_{2T} [N]	Designation
RMW 200-444-40L1-055	84.883	0	64.441	10700	10700	10700	ZST 200-334-1000-R11; optionally with INIRA®
RMW 300-444-20L1-055	63.662	0.4	59.031	10700	10700	10700	ZST 300-333-1000-R1; optionally with INIRA®
RMW 300-444-34L1-055	108.226	0	80.113	10700	10700	10700	ZST 300-333-1000-R1; optionally with INIRA®
RMS 300-323-20L1-040	63.662	0.4	59.031	10700	10700	10700	ZST 300-332-1000-R1; optionally with INIRA®
RMS 300-323-22L1-040	70.028	0.4	62.214	10700	10700	10700	ZST 300-332-1000-R1; optionally with INIRA®
RMS 300-323-24L1-040	76.394	0.4	65.397	10700	10700	10700	ZST 300-332-1000-R1; optionally with INIRA®

d = Pitch circle diameter
x = Addendum modification coefficient
A = Distance between pinion axle and rear surface of rack
F_{2T} = Maximum feed force depending on ratio and number of stages
Application-specific dimensioning with cymex® – www.wittenstein-cymex.com
* Other length options available

Motor shaft diameter [mm]

1-stage

greater than 24 (G)
up to 32/38 [4] (I/K)
clamping hub
diameters

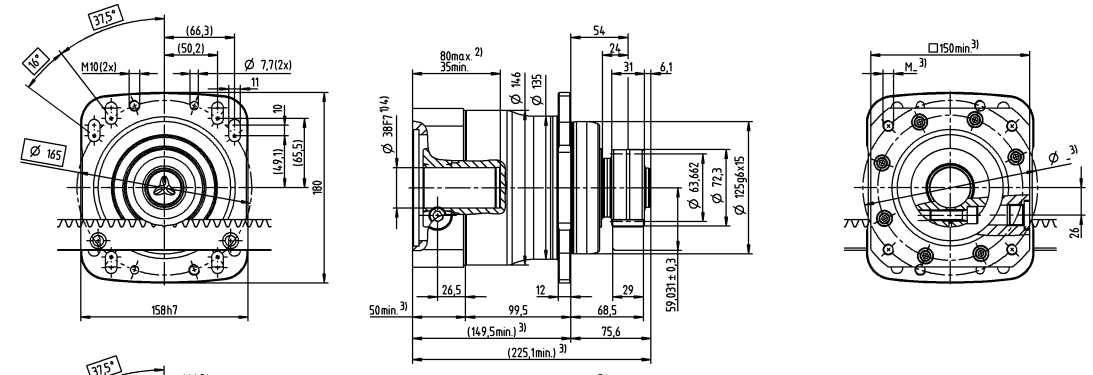

up to 48 [4] (M)
clamping hub
diameters

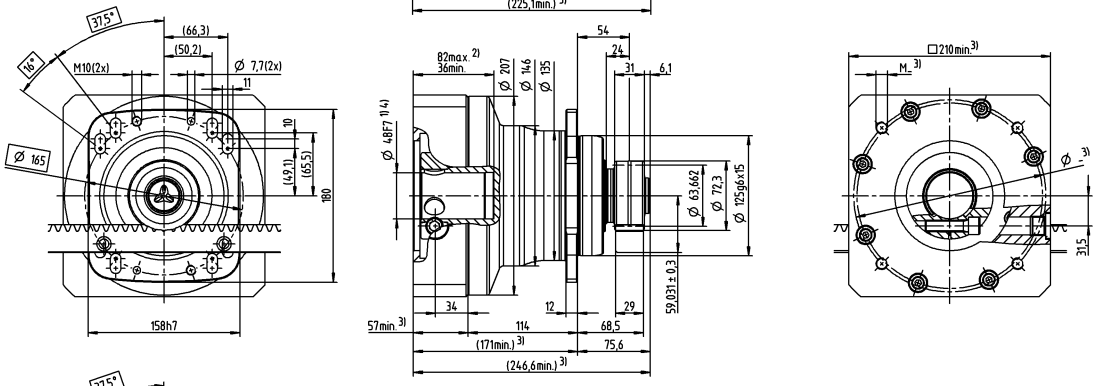

2-stage

greater than 19 (E)
up to 24 [4] (G)
clamping hub
diameters

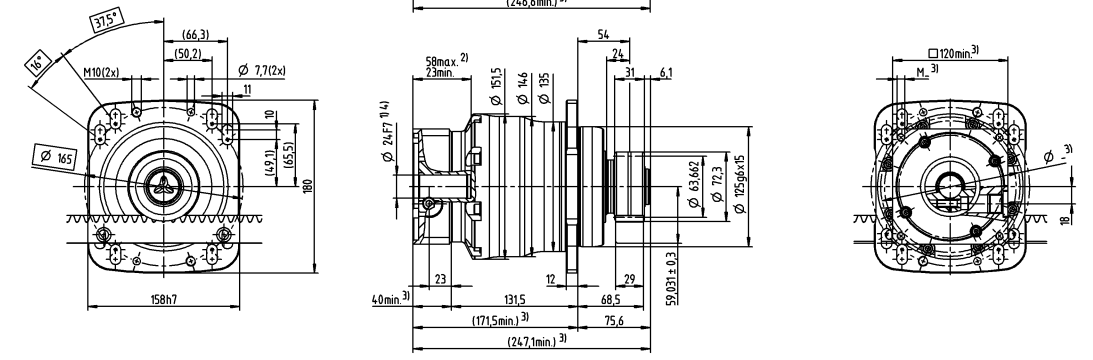

up to 38 [4] (K)
clamping hub
diameters

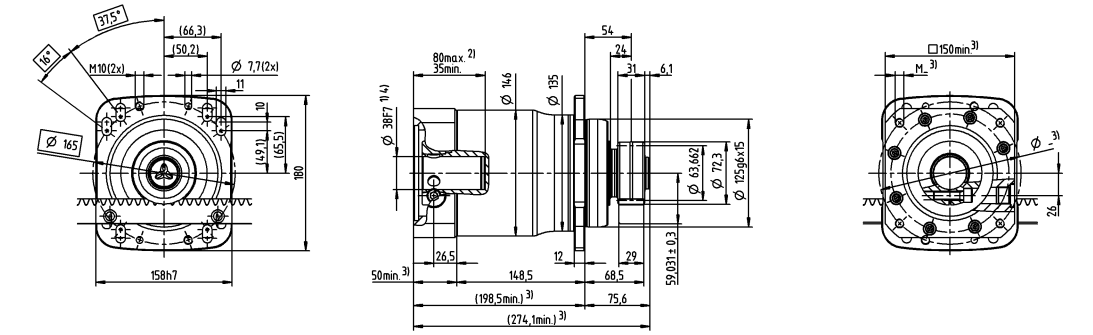

Non-tolerated dimensions are nominal dimensions
Detailed rack dimensions starting on page 161

1) Check motor shaft fit
2) Min./Max. permissible motor shaft length. Longer motor shafts are possible, please contact alpha.
3) The dimensions depend on the motor
4) Smaller motor shaft diameter is compensated by a bushing with a minimum thickness of 1 mm

Planetary gearbox RP+ 030 MA with rack module 2 and pinion RMW module 2

System	Max. feed force [1] F_{2T}		9750 N
	Max. feed speed [2] v_{max}		133 m/min
Gearbox	No. of stages [4]		1
	Ratios i [5]		5.5
	Clamping hub diameter		19 / 24 / 38 mm
	Designation		RP 030S-MA1-_ _ _-3_ _
Pinion	Module m		2 mm
	Number of teeth z		20
	Pitch circle diameter d		42.441 mm
	Profile correction factor x		0.4
	Helix angle $ß$		-19.5283° (left-handed)
	Designation		RMW 200-444-20L1-037
Rack	Module m		2 mm
	Length L (options)		1000 mm (500 mm)
	Helix angle $ß$		19.5283° (right-handed)
	Designation		ZST 200-334-1000-R11; optionally with INIRA®
Lubrication system [3]	Set consisting of lubrication pinion and axis for	Rack	LMT 200-PU -18L1-024-1
		Pinion	LMT 200-PU -18L1-024-1
	Lubricator	125 cm³	LUC+125-0511-02
		400 cm³	LUC+400-0511-02
	Lubricant		WITTENSTEIN alpha G11

[1] Maximum feed force depending on ratio and number of stages
[2] Calculation with lowest ratio and maximum input speed
[3] Impulse-controlled basic version with one output and 2 m hose. See page 118 for further information on the lubrication system.
Application-specific dimensioning with cymex® – www.wittenstein-cymex.com
[4] Also available with multiple stages.
[5] Additional 1-stage ratios 4 / 5 / 7 / 10 available for RP+ 030 MF

Alternative system solutions

Pinion			Axis distance	RP+ 030S	Rack*
Designation	d [mm]	x [ ]	A [mm]	F_{2T} [N]	Designation
RMW 200-444-40L1-055	84.883	0	64.441	11300	ZST 200-334-1000-R11; optionally with INIRA®
RMW 300-444-20L1-055	63.662	0.4	59.031	12900	ZST 300-333-1000-R1; optionally with INIRA®
RMW 300-444-34L1-055	108.226	0	80.113	9800	ZST 300-332-1000-R1; optionally with INIRA®
RMW 400-444-20L1-055	84.882	0.2	78.241	12500	ZST 400-332-1000-R1; optionally with INIRA®

d = Pitch circle diameter
x = Addendum modification coefficient
A = Distance between pinion axle and rear surface of rack
F_{2T} = Maximum feed force depending on ratio and number of stages
RPM+ available in customized version
Application-specific dimensioning with cymex® – www.wittenstein-cymex.com
* Other length options available

1-stage

Motor shaft diameter [mm]

up to 19 [4] (E) clamping hub diameters

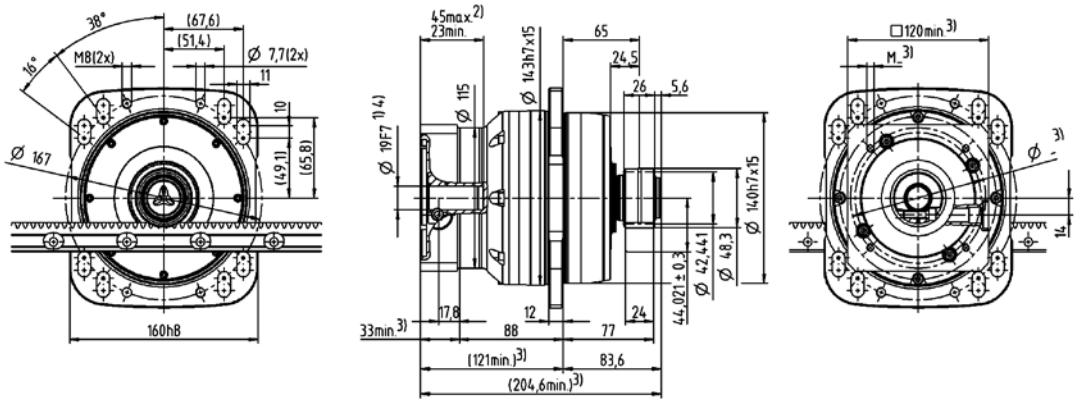

up to 24 [4] (G) clamping hub diameters

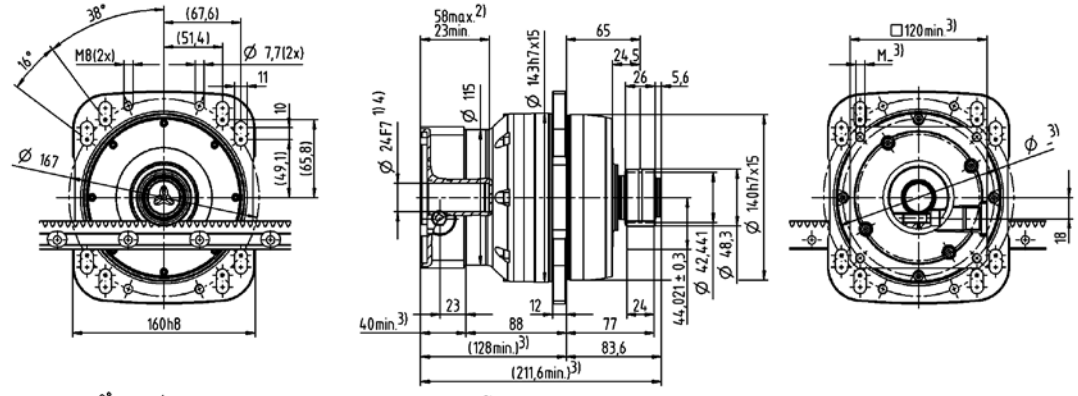

up to 38 [4] (K) clamping hub diameters

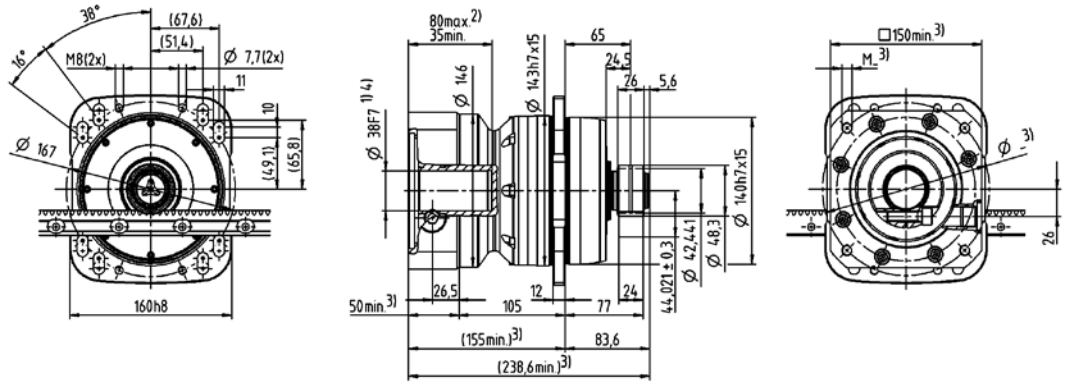

Non-tolerated dimensions are nominal dimensions
Detailed rack dimensions starting on page 161

[1] Check motor shaft fit
[2] Min./Max. permissible motor shaft length. Longer motor shafts are possible, please contact alpha.
[3] The dimensions depend on the motor
[4] Smaller motor shaft diameter is compensated by a bushing with a minimum thickness of 1 mm

Planetary gearbox RP+ 030 MA with rack module 3 and pinion RMW module 3

System	Max. feed force [1] F_{2T}		12900 N
	Max. feed speed [2] v_{max}		200 m/min
Gearbox	No. of stages [4]		1
	Ratios i [5]		5.5
	Clamping hub diameter		19 / 24 / 38 mm
	Designation		RP 030S-MA1-_ _ _-3_ _
Pinion	Module m		3 mm
	Number of teeth z		20
	Pitch circle diameter d		63.662 mm
	Profile correction factor x		0.4
	Helix angle $ß$		-19.5283° (left-handed)
	Designation		RMW 300-444-20L1-055
Rack	Module m		3 mm
	Length L (options)		1000 mm (500 mm)
	Helix angle $ß$		19.5283° (right-handed)
	Designation		ZST 300-334-1000-R11; optionally with INIRA®
Lubrication system [3]	Set consisting of lubrication pinion and axis for	Rack	LMT 300-PU -18L1-030-1
		Pinion	LMT 300-PU -18R1-030-1
	Lubricator	125 cm³	LUC+125-0511-02
		400 cm³	LUC+400-0511-02
	Lubricant		WITTENSTEIN alpha G11

[1] Maximum feed force depending on ratio and number of stages
[2] Calculation with lowest ratio and maximum input speed
[3] Impulse-controlled basic version with one output and 2 m hose. See page 118 for further information on the lubrication system.
Application-specific dimensioning with cymex® – www.wittenstein-cymex.com
[4] Also available with multiple stages.
[5] Additional 1-stage ratios 4 / 5 / 7 / 10 available for RP+ 030 MF

Alternative system solutions

Pinion			Axis distance	RP+ 030S	Rack*
Designation	d [mm]	x [ ]	A [mm]	F_{2T} [N]	Designation
RMW 200-444-20L1-037	42.441	0.4	44.021	9750	ZST 200-334-1000-R11; optionally with INIRA®
RMW 200-444-40L1-055	84.883	0	64.441	11300	ZST 200-334-1000-R11; optionally with INIRA®
RMW 300-444-34L1-055	108.226	0	80.113	9800	ZST 300-332-1000-R1; optionally with INIRA®
RMW 400-444-20L1-055	84.882	0.2	78.241	12500	ZST 400-332-1000-R1; optionally with INIRA®

d = Pitch circle diameter
x = Addendum modification coefficient
A = Distance between pinion axle and rear surface of rack
F_{2T} = Maximum feed force depending on ratio and number of stages
RPM+ available in customized version
Application-specific dimensioning with cymex® – www.wittenstein-cymex.com
* Other length options available

1-stage

Motor shaft diameter [mm]

up to 19 [4] (E) clamping hub diameters

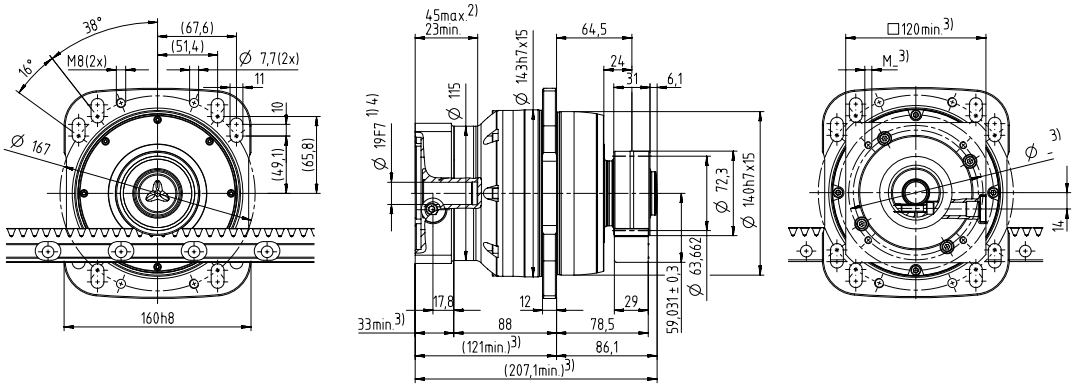

up to 24 [4] (G) clamping hub diameters

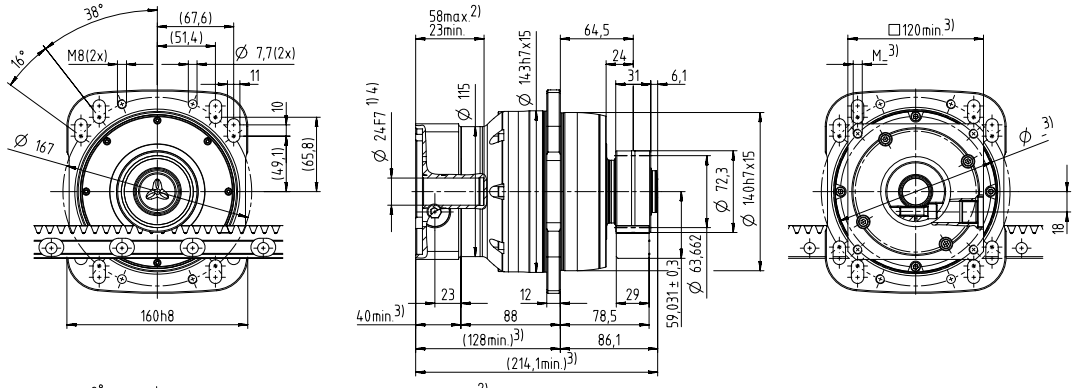

up to 38 [4] (K) clamping hub diameters

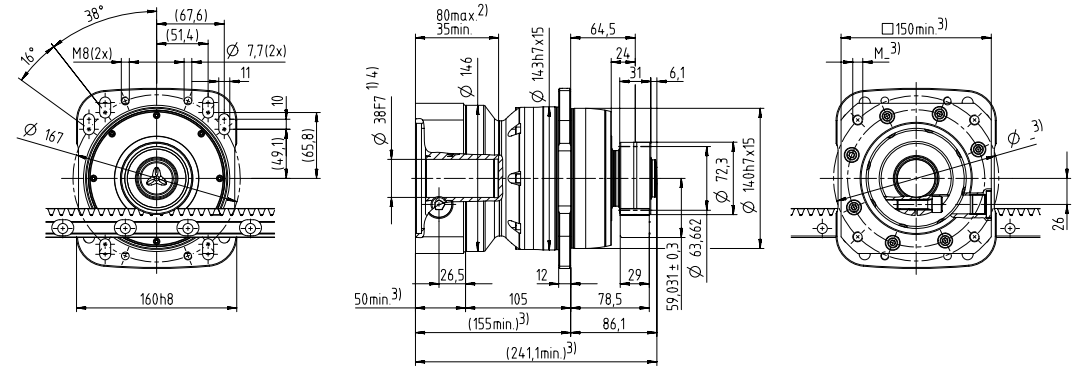

Non-tolerated dimensions are nominal dimensions
Detailed rack dimensions starting on page 161

[1] Check motor shaft fit
[2] Min./Max. permissible motor shaft length. Longer motor shafts are possible, please contact alpha.
[3] The dimensions depend on the motor
[4] Smaller motor shaft diameter is compensated by a bushing with a minimum thickness of 1 mm

Planetary gearbox RP+ 040 MF with rack module 3 and pinion RMW module 3

System	Max. feed force [1] F_{2T}		20300 N
	Max. feed speed [2] v_{max}		250 m/min
Gearbox	No. of stages		1
	Ratios *i*		4 / 5 / 7 / 10
	Clamping hub diameter		24 / 38 / 48 mm
	Designation		RP 040S-MF1-_ _ _-3_ _
Pinion	Module *m*		3 mm
	Number of teeth *z*		20
	Pitch circle diameter *d*		63.662 mm
	Profile correction factor *x*		0.4
	Helix angle *ß*		-19.5283° (left-handed)
	Designation		RMW 300-444-20L1-055
Rack	Module *m*		3 mm
	Length L (options)		1000 mm (500 mm)
	Helix angle *ß*		19.5283° (right-handed)
	Designation		ZST 300-334-1000-R11; optionally with INIRA®
Lubrication system [3]	Set consisting of lubrication pinion and axis for	Rack	LMT 300-PU -18L1-030-1
		Pinion	LMT 300-PU -18R1-030-1
	Lubricator	125 cm³	LUC+125-0511-02
		400 cm³	LUC+400-0511-02
	Lubricant		WITTENSTEIN alpha G11

[1] Maximum feed force depending on ratio and number of stages
[2] Calculation with lowest ratio and maximum input speed
[3] Impulse-controlled basic version with one output and 2 m hose. See page 118 for further information on the lubrication system.
Application-specific dimensioning with cymex® – www.wittenstein-cymex.com

Alternative system solutions

Pinion			Axis distance	RP+ 040S	RPM+ 040S	RPC+ 040S	RPK+ 040S	Rack*
Designation	*d* [mm]	*x* [ ]	*A* [mm]	F_{2T} [N]	F_{2T} [N]	F_{2T} [N]	F_{2T} [N]	Designation
RMW 300-444-20L1-055	63.662	0.4	59.031	20300	20300	20300	20300	ZST 300-334-1000-R11; optionally with INIRA®
RMW 300-444-34L1-073	108.226	0	80.113	12900	12900	12900	12900	ZST 300-334-1000-R11; optionally with INIRA®
RMW 400-444-20L1-073	84.882	0.2	78.241	16400	16400	16400	16400	ZST 400-333-1000-R1; optionally with INIRA®

d = Pitch circle diameter
x = Addendum modification coefficient
A = Distance between pinion axle and rear surface of rack
F_{2T} = Maximum feed force depending on ratio and number of stages
RPM+ available in customized version
Application-specific dimensioning with cymex® – www.wittenstein-cymex.com
* Other length options available

1-stage

Motor shaft diameter [mm]

up to 24 [4] (G) clamping hub diameters

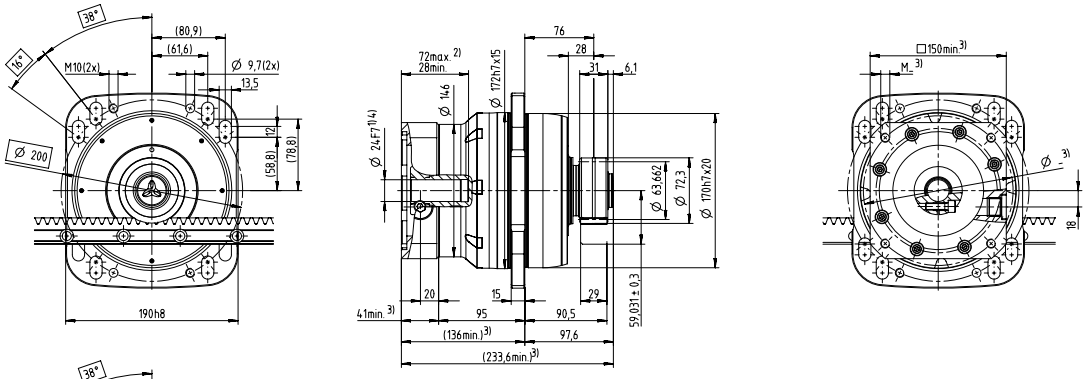

up to 38 [4] (K) clamping hub diameters

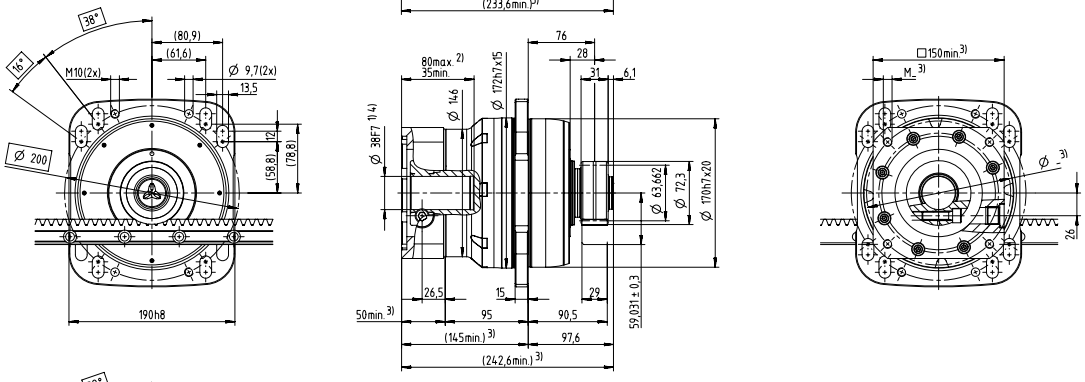

up to 48 [4] (M) clamping hub diameters

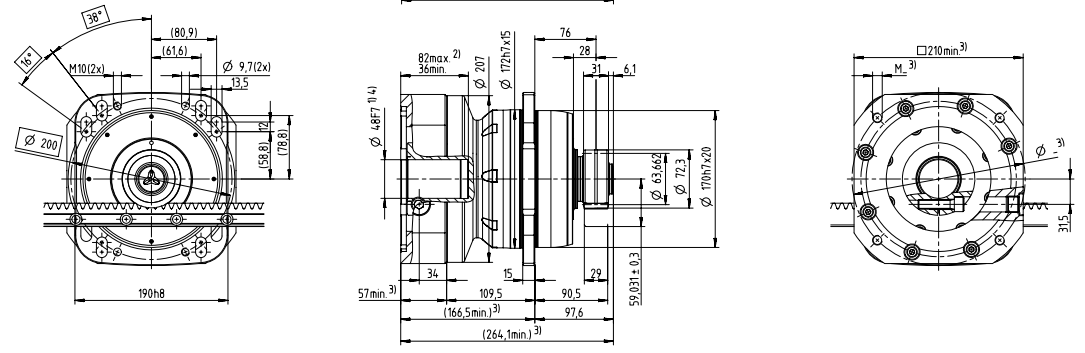

Non-tolerated dimensions are nominal dimensions
Detailed rack dimensions starting on page 161

1) Check motor shaft fit
2) Min./Max. permissible motor shaft length. Longer motor shafts are possible, please contact alpha.
3) The dimensions depend on the motor
4) Smaller motor shaft diameter is compensated by a bushing with a minimum thickness of 1 mm

Planetary gearbox RP+ 040 MA with rack module 4 and pinion RMW module 4

System	Max. feed force [1] F_{2T}		22300 N	
	Max. feed speed [2] v_{max}		104 m/min	25 m/min
Gearbox	No. of stages [3]		2	3
	Ratios *i*		16 / 22 / 27.5 / 38.5 / 55	66 / 88 / 110 / 154 / 220
	Clamping hub diameter		24 / 38 mm	24 mm
	Designation		RP 040S-MA2-_ _ _-3_ _	RP 040S-MA3-_ _ _-3_ _
Pinion	Module *m*		4 mm	
	Number of teeth *z*		20	
	Pitch circle diameter *d*		84.883 mm	
	Profile correction factor *x*		0.2	
	Helix angle *ß*		-19.5283° (left-handed)	
	Designation		RMW 400-444-20L1-073	
Rack	Module *m*		4 mm	
	Length L (options)		1000 mm (493 mm)	
	Helix angle *ß*		19.5283° (right-handed)	
	Designation		ZST 400-334-1000-R11; optionally with INIRA®	
Lubrication system [4]	Set consisting of lubrication pinion and axis for	Rack	LMT 400-PU -18L1-040-1	
		Pinion	LMT 400-PU -18R1-040-1	
	Lubricator	125 cm³	LUC+125-0511-02	
		400 cm³	LUC+400-0511-02	
	Lubricant		WITTENSTEIN alpha G11	

[1] Maximum feed force depending on ratio and number of stages
[2] Calculation with lowest ratio and maximum input speed
[3] Single-stage also available
[4] Impulse-controlled basic version with one output and 2 m hose. See page 118 for further information on the lubrication system.
Application-specific dimensioning with cymex® – www.wittenstein-cymex.com

Alternative system solutions

Pinion			Axis distance	RP+ 040S	RPM+ 040S	RPC+ 040S	RPK+ 040S	Rack*
Designation	*d* [mm]	*x* [ ]	*A* [mm]	F_{2T} [N]	F_{2T} [N]	F_{2T} [N]	F_{2T} [N]	Designation
RMW 300-444-20L1-055	63.662	0.4	59.031	20300	20300	20300	20300	ZST 300-334-1000-R11; optionally with INIRA®
RMW 300-444-34L1-073	108.226	0	80.113	20300	20300	20300	20300	ZST 300-334-1000-R11; optionally with INIRA®
RMW 400-444-20L1-073	84.882	0.2	78.241	22300	22300	22300	22300	ZST 400-333-1000-R15; optionally with INIRA®
RMW 400-444-24L1-073	101.859	0	85.930	20300	20300	20300	20300	ZST 400-332-1000-R15; optionally with INIRA®

d = Pitch circle diameter
x = Addendum modification coefficient
A = Distance between pinion axle and rear surface of rack
F_{2T} = Maximum feed force depending on ratio and number of stages
RPM+ available in customized version
Application-specific dimensioning with cymex® – www.wittenstein-cymex.com
* Other length options available

Motor shaft diameter [mm]

2-stage

up to 24 [4] (G) clamping hub diameters

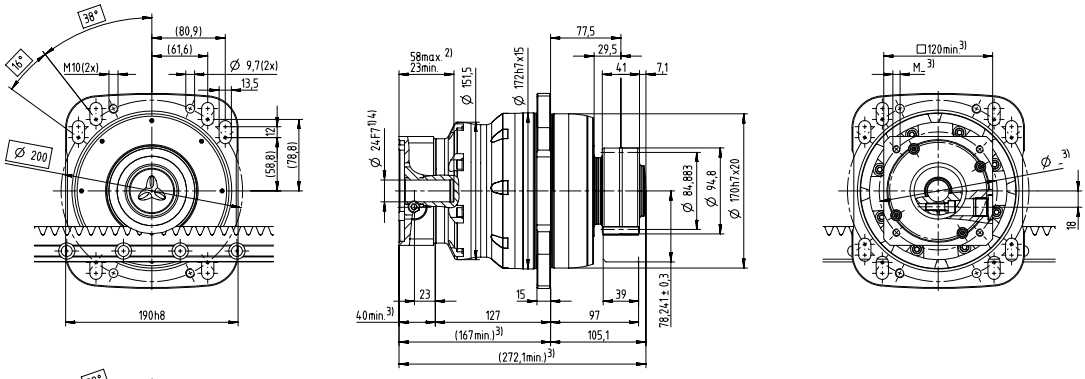

up to 38 [4] (K) clamping hub diameters

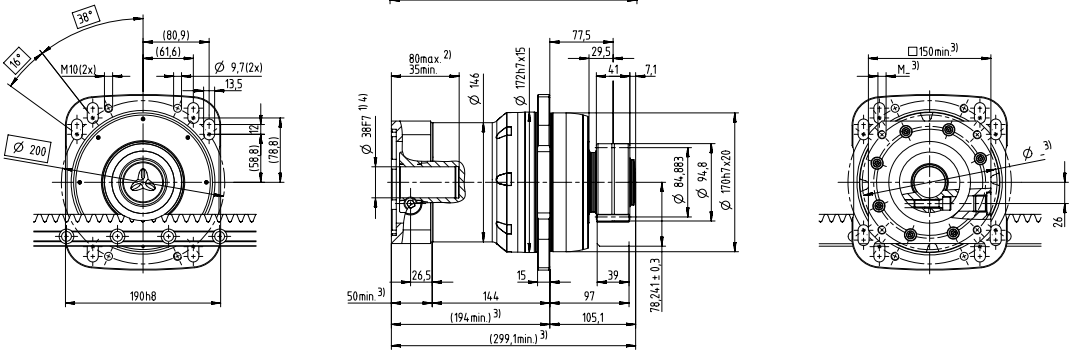

3-stage

up to 24 [4] (G) clamping hub diameters

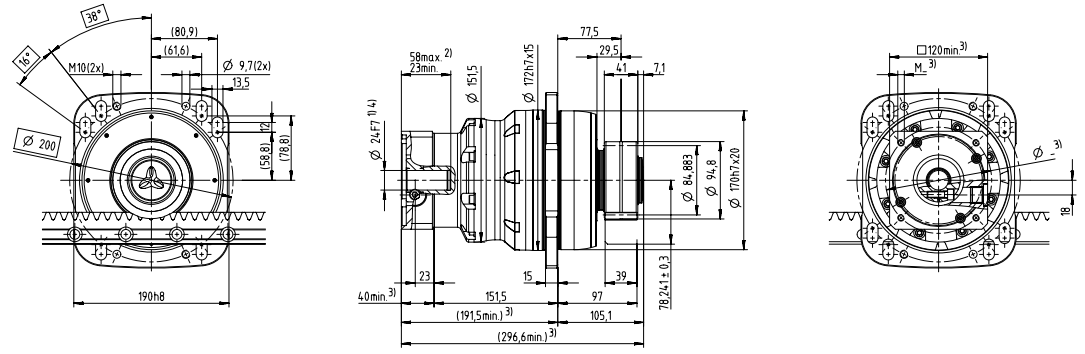

Non-tolerated dimensions are nominal dimensions
Detailed rack dimensions starting on page 161

[1] Check motor shaft fit
[2] Min./Max. permissible motor shaft length. Longer motor shafts are possible, please contact alpha.
[3] The dimensions depend on the motor
[4] Smaller motor shaft diameter is compensated by a bushing with a minimum thickness of 1 mm

Planetary gearbox RP+ 050 MA with rack module 4 and pinion RMW module 4

System	Max. feed force [1] F_{2T}		36100 N	
	Max. feed speed [2] v_{max}		112 m/min	27 m/min
Gearbox	No. of stages [3]		2	3
	Ratios *i*		16 / 22 / 27.5 / 38.5 / 55	66 / 88 / 110 / 154 / 220
	Clamping hub diameter		38 / 48 mm	38 mm
	Designation		RP 050S-MA2-_ _ _-3_ _	RP 050S-MA3-_ _ _-3_ _
Pinion	Module *m*		4 mm	
	Number of teeth *z*		24	
	Pitch circle diameter *d*		101.859 mm	
	Profile correction factor *x*		0	
	Helix angle *ß*		-19.5283° (left-handed)	
	Designation		RMW 400-444-24L1-089	
Rack	Module *m*		4 mm	
	Length L (options)		1000 mm (493 mm)	
	Helix angle *ß*		19.5283° (right-handed)	
	Designation		ZST 400-334-1000-R11; optionally with INIRA®	
Lubrication system [4]	Set consisting of lubrication pinion and axis for	Rack	LMT 400-PU -18L1-040-1	
		Pinion	LMT 400-PU -18R1-040-1	
	Lubricator	125 cm³	LUC+125-0511-02	
		400 cm³	LUC+400-0511-02	
	Lubricant		WITTENSTEIN alpha G11	

[1] Maximum feed force depending on ratio and number of stages
[2] Calculation with lowest ratio and maximum input speed
[3] Single-stage also available
[4] Impulse-controlled basic version with one output and 2 m hose. See page 118 for further information on the lubrication system.
Application-specific dimensioning with cymex® – www.wittenstein-cymex.com

Alternative system solutions

Pinion			Axis distance	RP+ 050S	RPM+ 050S	RPC+ 050S	RPK+ 050S	Rack*
Designation	*d* [mm]	*x* [ ]	*A* [mm]	F_{2T} [N]	F_{2T} [N]	F_{2T} [N]	F_{2T} [N]	Designation
RMW 400-444-24L1-089	101.859	0	85.930	36100	36100	36100	36100	ZST 400-334-1000-R11; optionally with INIRA®
RMW 400-444-30L1-089	127.324	0	98.662	31400	31400	31400	31400	ZST 400-334-1000-R11; optionally with INIRA®
RMW 500-444-19L1-089	100.798	0.4	86.399	36500	36500	36500	36500	ZST 500-333-1000-R1; optionally with INIRA®
RMW 500-444-23L1-106	122.019	0	95.009	47200	47200	47200	47200	ZST 500-334-1000-R11; optionally with INIRA®
RMW 500-444-30L1-106	159.155	0	113.578	39200	39200	39200	39200	ZST 500-334-1000-R11; optionally with INIRA®
RMW 600-444-19L1-106	120.958	0.4	105.879	47200	47200	47200	47200	ZST 600-334-1000-R11; optionally with INIRA®
RMW 600-444-23L1-106	146.423	0	116.211	41500	41500	41500	41500	ZST 600-332-1000-R1; optionally with INIRA®

d = Pitch circle diameter
x = Addendum modification coefficient
A = Distance between pinion axle and rear surface of rack
F_{2T} = Maximum feed force depending on ratio and number of stages
RPM+ available in customized version
Application-specific dimensioning with cymex® – www.wittenstein-cymex.com
* Other length options available

Motor shaft diameter [mm]

2-stage

up to 38 [4] (K) clamping hub diameters

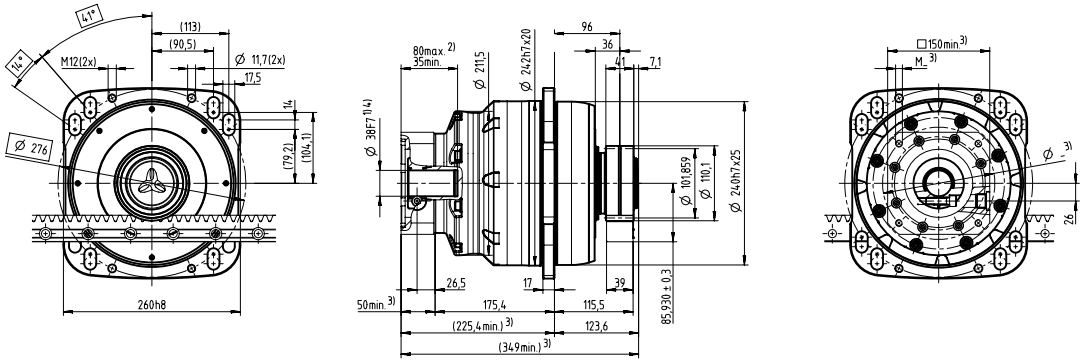

up to 48 [4] (M) clamping hub diameters

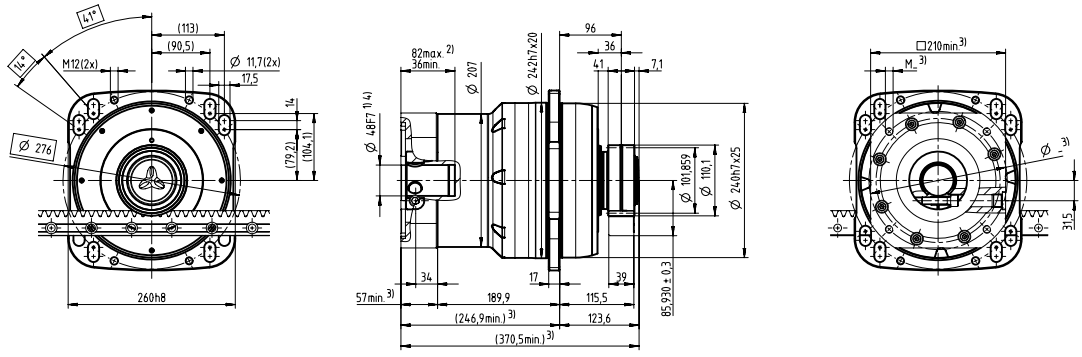

3-stage

up to 38 [4] (K) clamping hub diameters

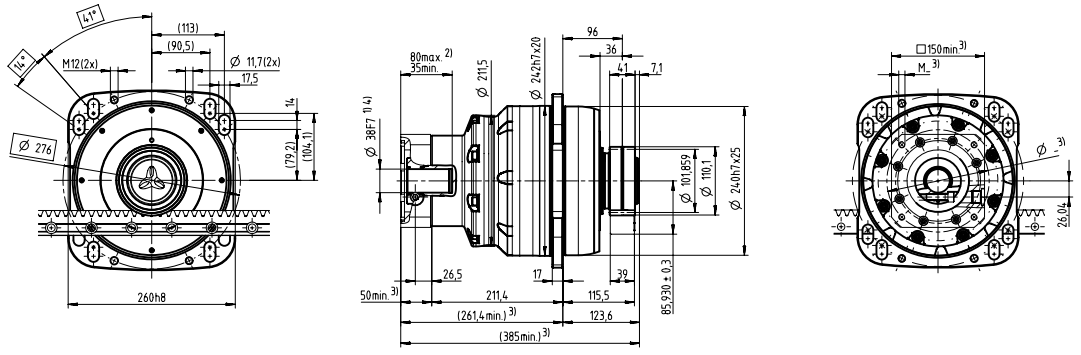

Non-tolerated dimensions are nominal dimensions
Detailed rack dimensions starting on page 161

[1] Check motor shaft fit
[2] Min./Max. permissible motor shaft length. Longer motor shafts are possible, please contact alpha.
[3] The dimensions depend on the motor
[4] Smaller motor shaft diameter is compensated by a bushing with a minimum thickness of 1 mm

Planetary gearbox RP+ 050 MA with rack module 5 and pinion RMW module 5

System	Max. feed force [1] F_{2T}		47000 N	
	Max. feed speed [2] v_{max}		135 m/min	33 m/min
Gearbox	No. of stages [3]		2	3
	Ratios *i*		22 / 27.5 / 38.5 / 55	66 / 88 / 110 / 154 / 220
	Clamping hub diameter		38 / 48 mm	38 mm
	Designation		RP 050S-MA2-_ _ _-3_ _	RP 050S-MA3-_ _ _-3_ _
Pinion	Module *m*		5 mm	
	Number of teeth *z*		23	
	Pitch circle diameter *d*		122.019 mm	
	Profile correction factor *x*		0	
	Helix angle *ß*		-19.5283° (left-handed)	
	Designation		RMW 500-444-23L1-106	
Rack	Module *m*		5 mm	
	Length L (options)		1000 mm (500 mm)	
	Helix angle *ß*		19.5283° (right-handed)	
	Designation		ZST 500-334-1000-R11; optionally with INIRA®	
Lubrication system [4]	Set consisting of lubrication pinion and axis for	Rack	LMT 500-PU -17L1-050-1	
		Pinion	LMT 500-PU -17R1-050-1	
	Lubricator	125 cm³	LUC+125-0511-02	
		400 cm³	LUC+400-0511-02	
	Lubricant		WITTENSTEIN alpha G11	

[1] Maximum feed force depending on ratio and number of stages
[2] Calculation with lowest ratio and maximum input speed
[3] Single-stage also available
[4] Impulse-controlled basic version with one output and 2 m hose. See page 118 for further information on the lubrication system.
Application-specific dimensioning with cymex® – www.wittenstein-cymex.com

Alternative system solutions

Pinion			Axis distance	RP+ 050S	RPM+ 050S	RPC+ 050S	RPK+ 050S	Rack*
Designation	*d* [mm]	*x* [ ]	*A* [mm]	F_{2T} [N]	F_{2T} [N]	F_{2T} [N]	F_{2T} [N]	Designation
RMW 400-444-24L1-089	101.859	0	85.930	36100	36100	36100	36100	ZST 400-334-1000-R11; optionally with INIRA®
RMW 400-444-30L1-089	127.324	0	98.662	31400	31400	31400	31400	ZST 400-334-1000-R11; optionally with INIRA®
RMW 500-444-19L1-089	100.798	0.4	86.399	36500	36500	36500	36500	ZST 500-333-1000-R1; optionally with INIRA®
RMW 500-444-23L1-106	122.019	0	95.009	47200	47200	47200	47200	ZST 500-334-1000-R11; optionally with INIRA®
RMW 500-444-30L1-106	159.155	0	113.578	39200	39200	39200	39200	ZST 500-334-1000-R11; optionally with INIRA®
RMW 600-444-19L1-106	120.958	0.4	105.879	47200	47200	47200	47200	ZST 600-333-1000-R1; optionally with INIRA®
RMW 600-444-23L1-106	146.423	0	116.211	41500	41500	41500	41500	ZST 600-332-1000-R1; optionally with INIRA®

d = Pitch circle diameter
x = Addendum modification coefficient
A = Distance between pinion axle and rear surface of rack
F_{2T} = Maximum feed force depending on ratio and number of stages
RPM+ available in customized version
Application-specific dimensioning with cymex® – www.wittenstein-cymex.com
* Other length options available

Motor shaft diameter [mm]

2-stage

up to 38 [4] (K) clamping hub diameters

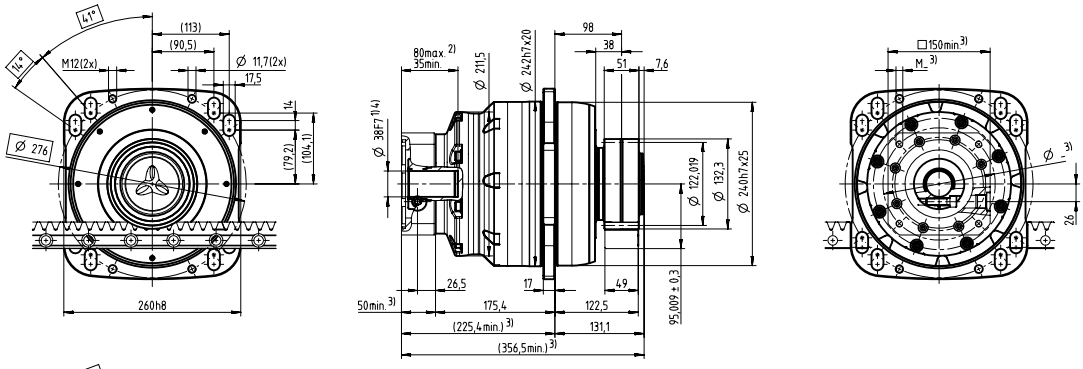

up to 48 [4] (M) clamping hub diameters

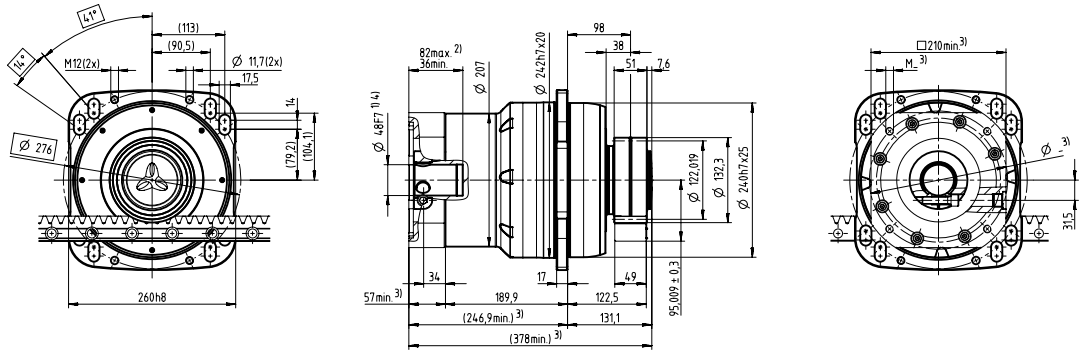

3-stage

up to 38 [4] (K) clamping hub diameters

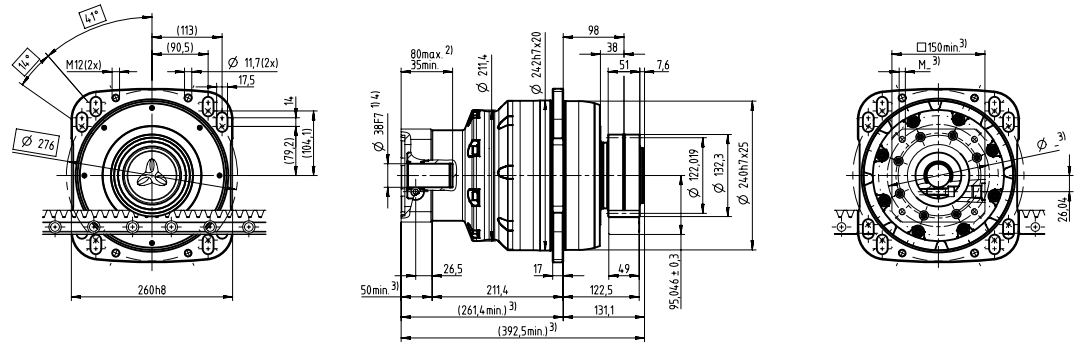

Non-tolerated dimensions are nominal dimensions
Detailed rack dimensions starting on page 161

[1] Check motor shaft fit
[2] Min./Max. permissible motor shaft length. Longer motor shafts are possible, please contact alpha.
[3] The dimensions depend on the motor
[4] Smaller motor shaft diameter is compensated by a bushing with a minimum thickness of 1 mm

Planetary gearbox RP+ 060 MA with rack module 6 and pinion RMW module 6

System	Max. feed force [1] F_{2T}		75000 N	
	Max. feed speed [2] v_{max}		91 m/min	30 m/min
Gearbox	No. of stages [3]		2	3
	Ratios *i*		22 / 27.5 / 38.5 / 55	66 / 88 / 110 / 154 / 220
	Clamping hub diameter		48 mm	38 mm
	Designation		RP 060S-MA2-_ _ _-3_ _	RP 060S-MA3-_ _ _-3_ _
Pinion	Module *m*		6 mm	
	Number of teeth *z*		23	
	Pitch circle diameter *d*		146.423 mm	
	Profile correction factor *x*		0	
	Helix angle *ß*		-19.5283° (left-handed)	
	Designation		RMW 600-444-23L1-128	
Rack	Module *m*		6 mm	
	Length L (options)		1000 mm (500 mm)	
	Helix angle *ß*		19.5283° (right-handed)	
	Designation		ZST 600-334-1000-R11; optionally with INIRA®	
Lubrication system [4]	Set consisting of lubrication pinion and axis for	Rack	LMT 600-PU -17L1-060-1	
		Pinion	LMT 600-PU -17R1-060-1	
	Lubricator	125 cm³	LUC+125-0511-02	
		400 cm³	LUC+400-0511-02	
	Lubricant		WITTENSTEIN alpha G11	

[1] Maximum feed force depending on ratio and number of stages
[2] Calculation with lowest ratio and maximum input speed
[3] Single-stage also available
[4] Impulse-controlled basic version with one output and 2 m hose. See page 118 for further information on the lubrication system.
Application-specific dimensioning with cymex® – www.wittenstein-cymex.com

Alternative system solutions

Pinion			Axis distance	RP+ 060S	RPM+ 060S	RPC+ 060S	RPK+ 060S	Rack*
Designation	*d* [mm]	*x* [ ]	*A* [mm]	F_{2T} [N]	F_{2T} [N]	F_{2T} [N]	F_{2T} [N]	Designation
RMW 500-444-23L1-106	122.019	0	95.009	47000	47000	47000	47000	ZST 500-334-1000-R11; optionally with INIRA®
RMW 500-444-30L1-106	159.155	0	113.578	39400	39400	39400	39400	ZST 500-334-1000-R11; optionally with INIRA®
RMW 600-444-19L1-106	120.958	0.4	105.879	47200	47200	47200	47200	ZST 600-333-1000-R1; optionally with INIRA®
RMW 600-444-23L1-128	146.423	0	116.211	75000	75000	75000	75000	ZST 600-334-1000-R11; optionally with INIRA®
RMW 600-444-28L1-128	178.254	0	132.127	61500	61500	61500	61500	ZST 600-334-1000-R11; optionally with INIRA®

d = Pitch circle diameter
x = Addendum modification coefficient
A = Distance between pinion axle and rear surface of rack
F_{2T} = Maximum feed force depending on ratio and number of stages
RPM+ available in customized version
Application-specific dimensioning with cymex® – www.wittenstein-cymex.com
* Other length options available

Motor shaft diameter [mm]

2-stage

up to 48 [4] (M) clamping hub diameters

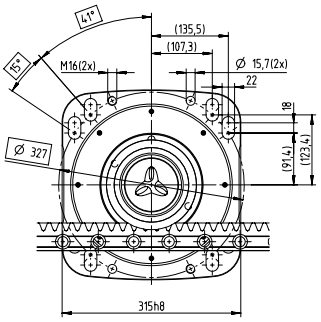

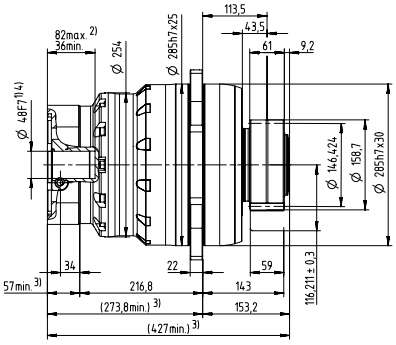

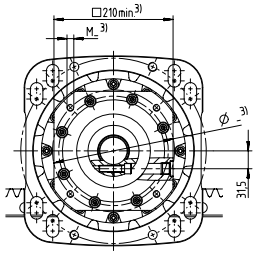

3-stage

up to 38 [4] (K) clamping hub diameters

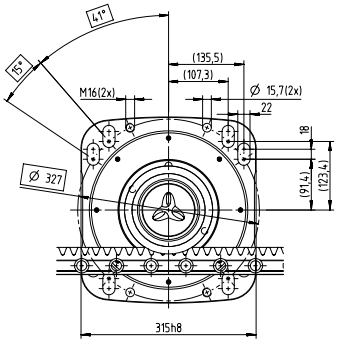

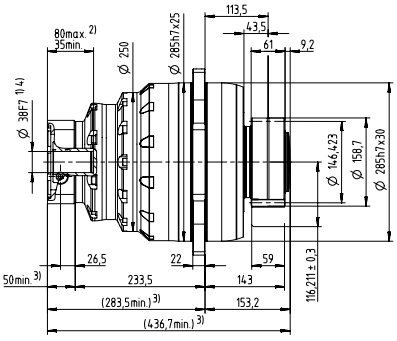

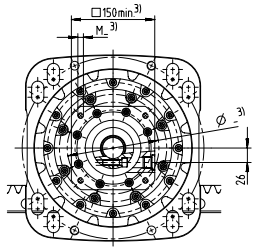

Non-tolerated dimensions are nominal dimensions
Detailed rack dimensions starting on page 161

[1] Check motor shaft fit
[2] Min./Max. permissible motor shaft length. Longer motor shafts are possible, please contact alpha.
[3] The dimensions depend on the motor
[4] Smaller motor shaft diameter is compensated by a bushing with a minimum thickness of 1 mm

Planetary gearbox RP+ 080 MA with rack module 8 and pinion RMW module 8

System	Max. feed force [1] F_{2T}		112000 N	
	Max. feed speed [2] v_{max}		111 m/min	37 m/min
Gearbox	No. of stages [3]		2	3
	Ratios *i*		22 / 27.5 / 38.5 / 55	66 / 88 / 110 / 154 / 220
	Clamping hub diameter		48 mm	38 / 48 mm
	Designation		RP 080S-MA2-_ _ _-3_ _	RP 080S-MA3-_ _ _-3_ _
Pinion	Module *m*		8 mm	
	Number of teeth *z*		21	
	Pitch circle diameter *d*		178.254 mm	
	Profile correction factor *x*		0.2	
	Helix angle *ß*		-19.5283° (left-handed)	
	Designation		RMW 800-444-21L1-156	
Rack	Module *m*		8 mm	
	Length L (options)		960 mm	
	Helix angle *ß*		19.5283° (right-handed)	
	Designation		ZST 800-334- 960-R11; optionally with INIRA®	
Lubrication system [4]	Set consisting of lubrication pinion and axis for	Rack	LMT 800-PU -17L1-080-1	
		Pinion	LMT 800-PU -17R1-080-1	
	Lubricator	125 cm³	LUC+125-0511-02	
		400 cm³	LUC+400-0511-02	
	Lubricant		WITTENSTEIN alpha G11	

[1] Maximum feed force depending on ratio and number of stages
[2] Calculation with lowest ratio and maximum input speed
[3] Single-stage also available
[4] Impulse-controlled basic version with one output and 2 m hose. See page 118 for further information on the lubrication system.
Application-specific dimensioning with cymex® – www.wittenstein-cymex.com

Alternative system solutions

Pinion			Axis distance	RP+ 080S	RPM+ 080S	RPC+ 080S	RPK+ 080S	Rack*
Designation	*d* [mm]	*x* [ ]	*A* [mm]	F_{2T} [N]	F_{2T} [N]	F_{2T} [N]	F_{2T} [N]	Designation
RMW 600-444-23L1-128	146.423	0	116.211	75000	75000	75000	75000	ZST 600-334-1000-R11; optionally with INIRA®
RMW 600-444-28L1-128	178.254	0	132.127	64500	64500	64500	64500	ZST 600-334-1000-R11; optionally with INIRA®
RMW 800-444-21L1-156	178.254	0.2	161.727	112000	112000	112000	112000	ZST 800-334- 960-R11; optionally with INIRA®

d = Pitch circle diameter
x = Addendum modification coefficient
A = Distance between pinion axle and rear surface of rack
F_{2T} = Maximum feed force depending on ratio and number of stages
RPM+ available in customized version
Application-specific dimensioning with cymex® – www.wittenstein-cymex.com
* Other length options available

Motor shaft diameter [mm]

2-stage

up to 48 [4] (M) clamping hub diameters

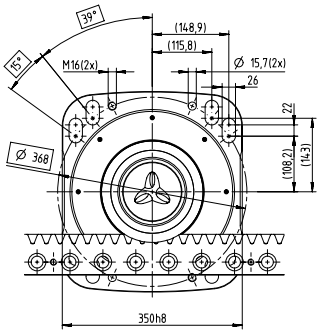

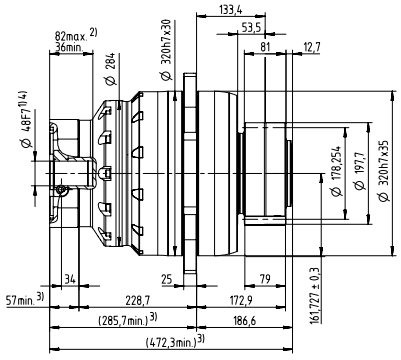

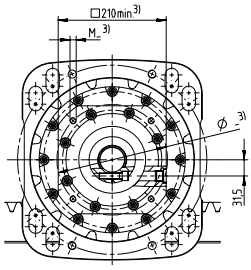

3-stage

up to 38 [4] (K) clamping hub diameters

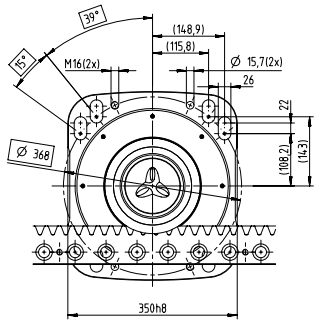

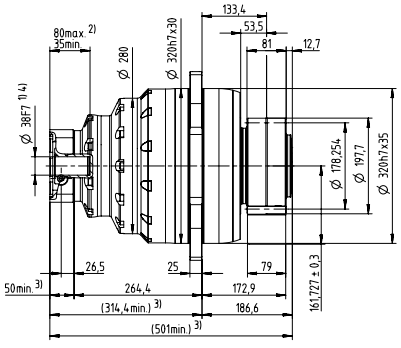

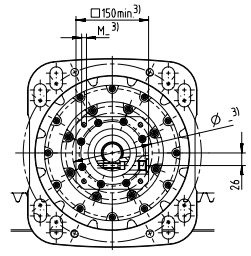

up to 48 [4] (M) clamping hub diameters

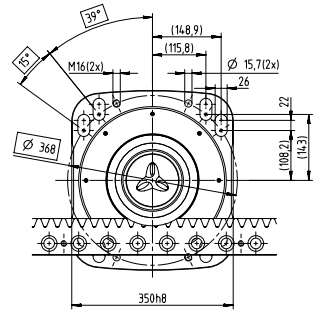

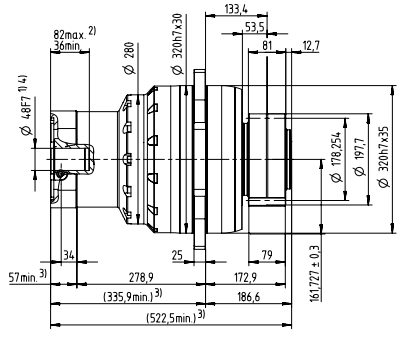

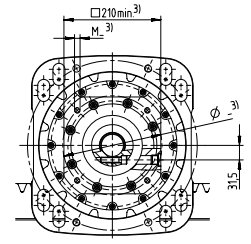

Non-tolerated dimensions are nominal dimensions
Detailed rack dimensions starting on page 161

[1] Check motor shaft fit
[2] Min./Max. permissible motor shaft length. Longer motor shafts are possible, please contact alpha.
[3] The dimensions depend on the motor
[4] Smaller motor shaft diameter is compensated by a bushing with a minimum thickness of 1 mm

Rotary systems with straight toothing

Know-how of linear technology for rotary applications

Applications for gearboxes with a straight-toothed output pinion can be found where smooth operation has a low priority, axial forces generated by helical teeth should be prevented, or a straight-toothed mating gear such as a gear ring is already chosen. We now offer an extensive portfolio for such applications. Depending on the requirements regarding positioning accuracy and feed force one can choose between a variety of alternative solutions. You can create the perfect drive configuration quickly and easily using the new "gear ring" module in cymex®. Drives with a straight-toothed output pinion are not only suitable for gear rings, they can also be used in combination with straight-toothed racks.



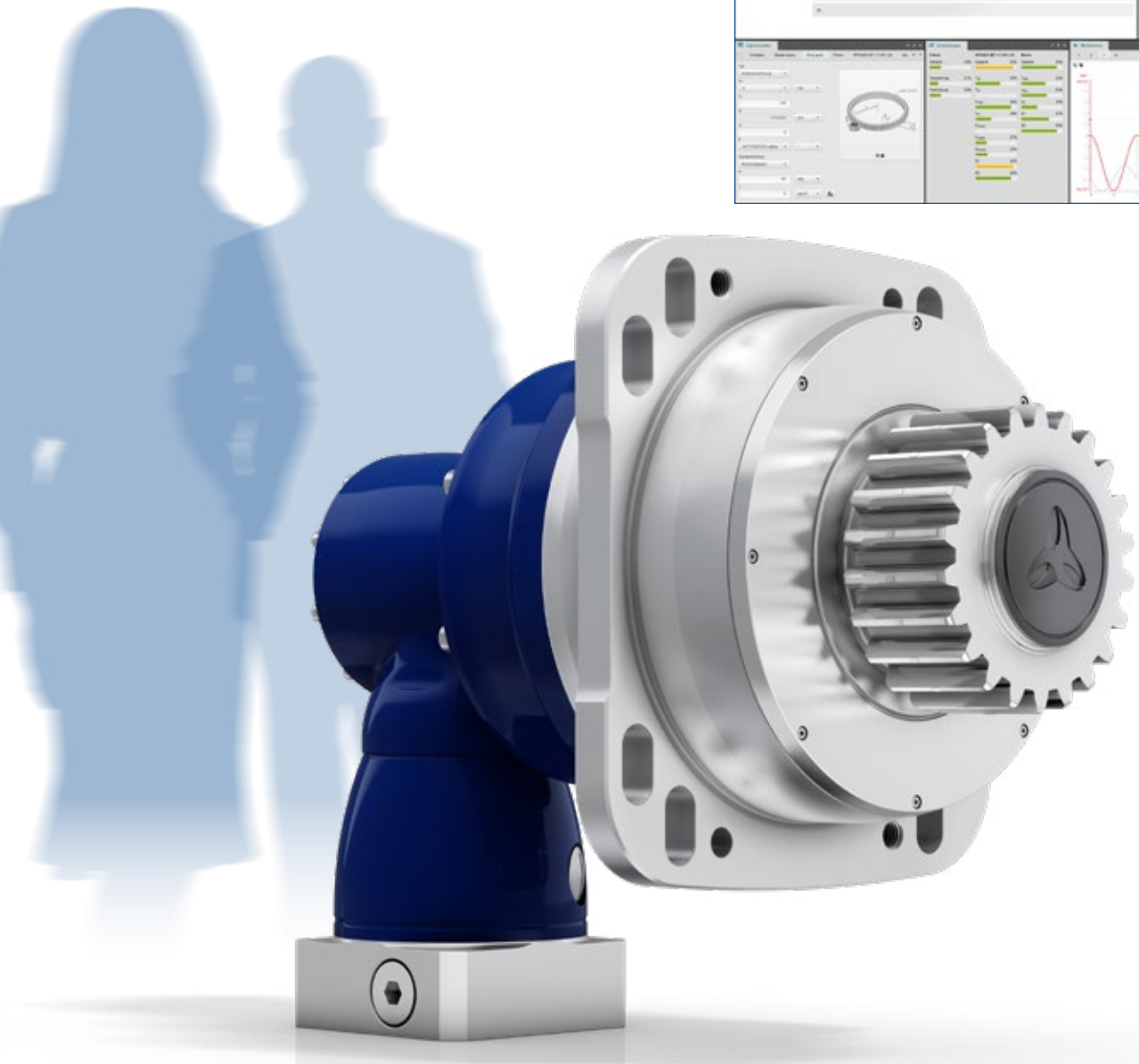

RPK+ with straight-toothed output pinion

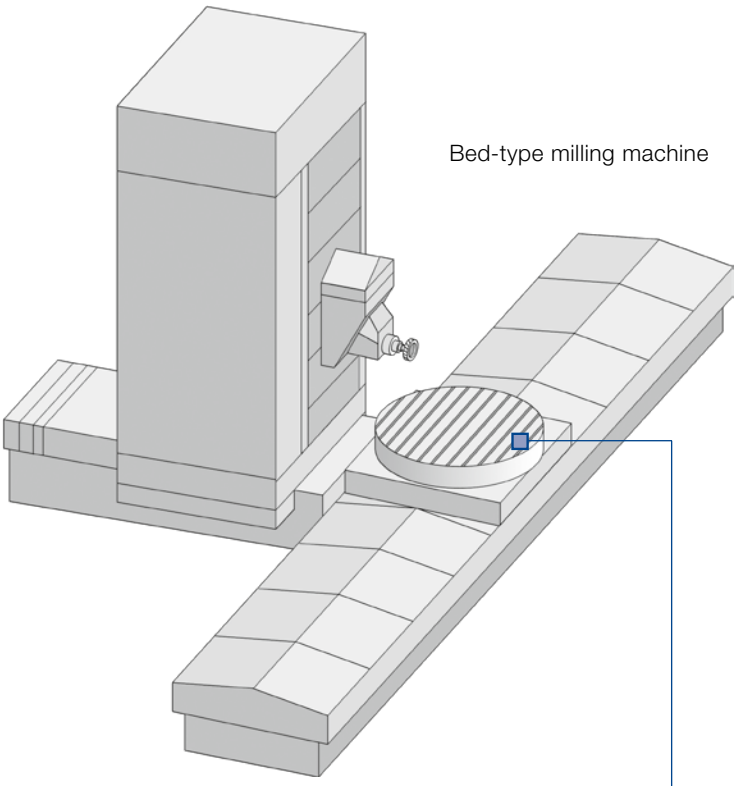
Bed-type milling machine

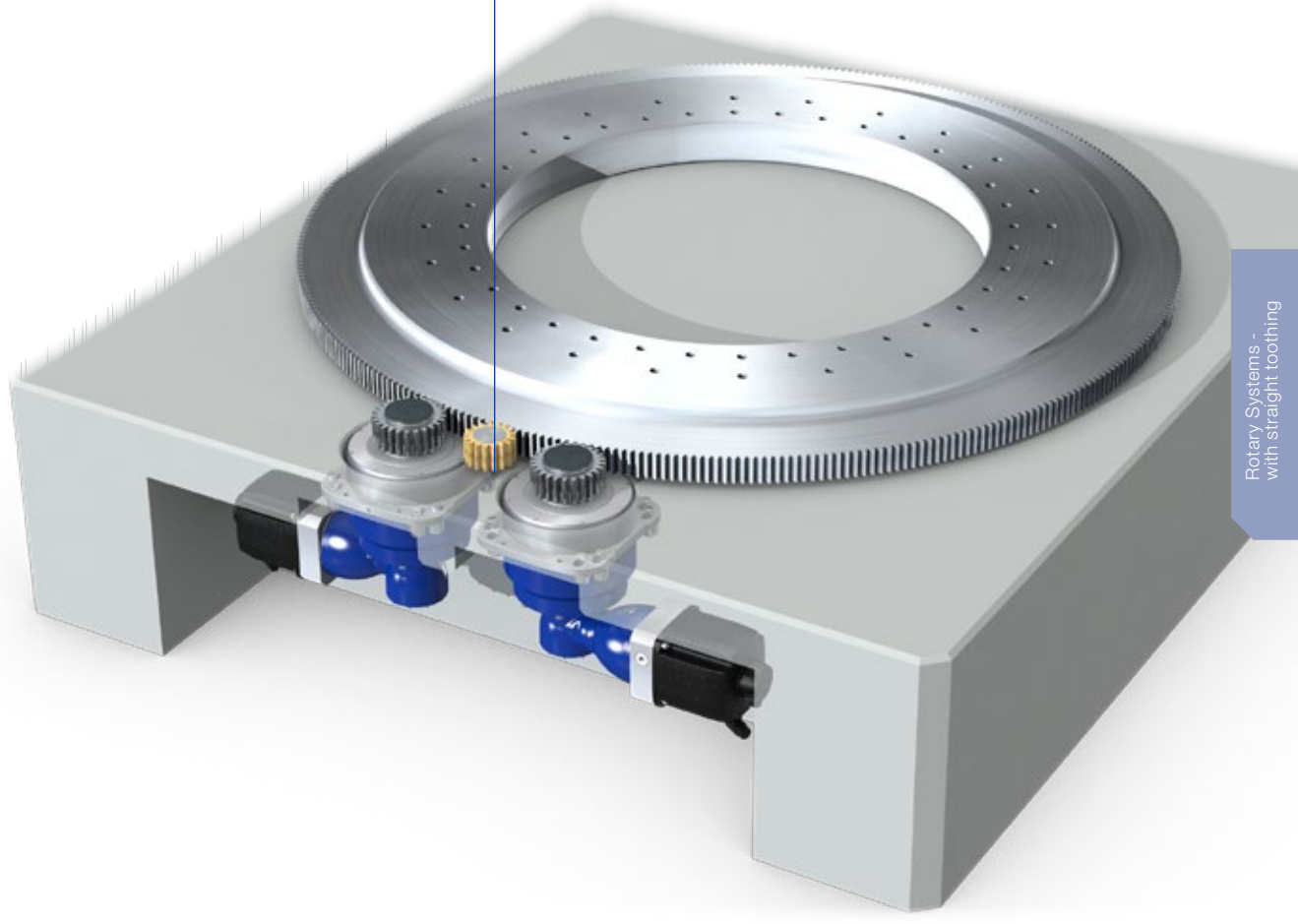

Rotary systems with straight toothing – Value Segment

NPR, NPS and NPL with straight-toothed RMK preferred pinion

	NPR / NPS / NPL				
	015	025	035	045	
Pinion	F_{2T}* [N]	F_{2T}* [N]	F_{2T}* [N]	F_{2T}* [N]	**Set consisting of lubrication pinion and axis[1)]**
Ordering code					Ordering code
RMK 150-222-20G0-016-022	1990				LMT 150-PU -24G0-020-1
RMK 200-222-19G0-016-019	2100				LMT 200-PU -17G0-020-1
RMK 200-222-22G0-022-020		3400			LMT 200-PU -17G0-020-1
RMK 300-222-22G0-032-019			6170		LMT 300-PU -17G0-030-1
RMK 300-222-25G0-040-036				9300	LMT 300-PU -17G0-030-1
RMK 400-222-20G0-040-036				9300	LMT 400-PU -17G0-040-1

* F_{2T} Tangential force / feed force – adhere to the permissible tangential force of mating gear
[1)] See page 118 for further information on the lubricator and lubrication system
Application-specific dimensioning with cymex® – www.wittenstein-cymex.com

NP with straight-toothed RMK preferred pinion

	NP				
	015	025	035	045	
Pinion	F_{2T}* [N]	F_{2T}* [N]	F_{2T}* [N]	F_{2T}* [N]	**Set consisting of lubrication pinion and axis[1)]**
Ordering code					Ordering code
RMK 150-222-20G0-016-022	1160				LMT 150-PU -24G0-020-1
RMK 200-222-19G0-016-019	2100				LMT 200-PU -17G0-020-1
RMK 200-222-22G0-022-020		2020			LMT 200-PU -17G0-020-1
RMK 300-222-22G0-032-019			4680		LMT 300-PU -17G0-030-1
RMK 300-222-25G0-040-036				7450	LMT 300-PU -17G0-030-1
RMK 400-222-20G0-040-036				7450	LMT 400-PU -17G0-040-1

* F_{2T} Tangential force / feed force – adhere to the permissible tangential force of mating gear
[1)] See page 118 for further information on the lubricator and lubrication system
Application-specific dimensioning with cymex® – www.wittenstein-cymex.com

Pinion designation	Gearbox size	*m* [mm]	*z* [ ]	*x* [ ]	*d* [mm]	d_a [mm]	*A* ± 0.3 [mm]	*b* [mm]	*B* [mm]	L_{12} [mm]	L_{13} [mm]	L_{15} [mm]	L_{16} [mm]	L_{17} [mm]	l_{Fq} [mm]
RMK 150-222-20G0-016-022	NPR 015S*	1.5	20	0.3	30	33.9	32.95	21	19	54	41.5	12	32	2	21.5
RMK 200-222-19G0-016-019	NPR 015S*	2	19	0.4	38	43.6	41.8	26	24	54	39	7	27	2	19
RMK 200-222-22G0-022-020	NPR 025S*	2	22	0	44	48	44	26	24	62	40	8	28	9	20
RMK 300-222-22G0-032-019	NPR 035S*	3	22	0	66	71.9	59	31	29	95.5	48.5	4	34	31.5	18.5
RMK 300-222-25G0-040-036	NPR 045S*	3	25	0	75	80.9	63.5	31	29	122	65.5	21	51	41	35.5
RMK 400-222-20G0-040-036	NPR 045S*	4	20	0	80	87.9	75	41	39	122	65.5	16	46	36	35.5

* also applies to NPS
m = Module
z = Number of teeth
d = Pitch circle diameter
x = Addendum modification coefficient
d_a = Tip diameter
Refer to the respective gearbox catalog for the exact gearbox dimensions.

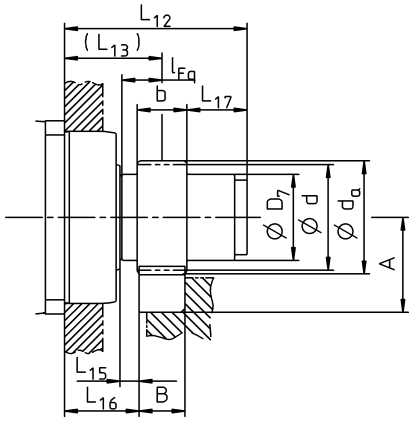

Pinion designation	Gearbox size	*m* [mm]	*z* [ ]	*x* [ ]	*d* [mm]	d_a [mm]	*A* ± 0.3 [mm]	*b* [mm]	*B* [mm]	L_{12} [mm]	L_{13} [mm]	L_{15} [mm]	L_{16} [mm]	L_{17} [mm]	l_{Fq} [mm]
RMK 150-222-20G0-016-022	NP 015S	1.5	20	0.3	30	33.9	32.95	21	19	42	29.5	12	20	2	21.5
RMK 200-222-19G0-016-019	NP 015S	2	19	0.4	38	43.6	41.8	26	24	42	27	7	15	2	19
RMK 200-222-22G0-022-020	NP 025S	2	22	0	44	48	44	26	24	52	30	8	18	9	20
RMK 300-222-22G0-032-019	NP 035S	3	22	0	66	71.9	59	31	29	77.5	30.5	4	16	31.5	18.5
RMK 300-222-25G0-040-036	NP 045S	3	25	0	75	80.9	63.5	31	29	107	50.5	21	36	41	35.5
RMK 400-222-20G0-040-036	NP 045S	4	20	0	80	87.9	75	41	39	107	50.5	16	31	36	35.5

m = Module
z = Number of teeth
d = Pitch circle diameter
x = Profile correction factor
d_a = Tip diameter
Refer to the respective gearbox catalog for the exact gearbox dimensions.

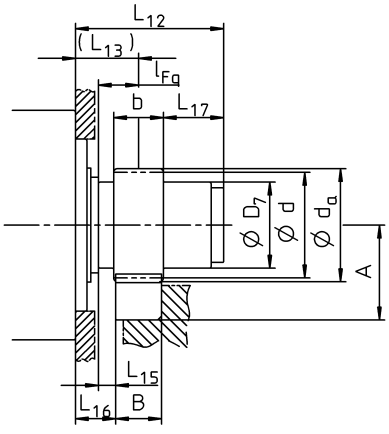

Rotary systems with straight toothing – Advanced Segment

SP+, SK+, SPK+ and SPC+ with straight-toothed RMS preferred pinion

	SP+ / SK+ / SPK+ / SPC+					
	060[2]	075	100	140	180	
Pinion	F_{2T}* [N]	F_{2T}* [N]	F_{2T}* [N]	F_{2T}* [N]	F_{2T}* [N]	**Set consisting of lubrication pinion and axis[1]**
Ordering code						Ordering code
RMS 200-323-16G0-016	2320					LMT 200-PU -17G0-020-1
RMS 200-323-19G0-022		3410				LMT 200-PU -17G0-020-1
RMS 300-323-17G0-032			6170			LMT 300-PU -17G0-030-1
RMS 300-323-22G0-040				9040		LMT 300-PU -17G0-030-1
RMS 400-323-19G0-040				9260		LMT 400-PU -17G0-040-1
RMS 400-323-22G0-055					13300	LMT 400-PU -17G0-040-1
RMS 500-323-19G0-055					13900	LMT 500-PU -17G0-050-1

* F_{2T} Tangential force / feed force – adhere to the permissible tangential force of mating gear
[1] See page 118 for further information on the lubricator and lubrication system
[2] not with SPK+
Also available with V-Drive VT+
Application-specific dimensioning with cymex® – www.wittenstein-cymex.com

TP+, TK+, TPK+ and TPC+ with straight-toothed RMF preferred pinion

	TP+ / TK+ / TPK+ / TPC+					
	010	025	050	110	TP+ 4000 HIGH TORQUE	
Pinion	F_{2T}* [N]	F_{2T}* [N]	F_{2T}* [N]	F_{2T}* [N]	F_{2T}* [N]	**Set consisting of lubrication pinion and axis[1]**
Ordering code						Ordering code
RMF 200-443-36G0-050-8xM6	2640					LMT 200-PU -17G0-020-1
RMF 200-443-36G0-063-12xM6		3500				LMT 200-PU -17G0-020-1
RMF 300-443-37G0-080-12xM8			11500			LMT 300-PU -17G0-030-1
RMF 400-443-40G0-125-12xM10				22400		LMT 400-PU -17G0-040-1
RMF 1000-443-36G0-260-16xM30					176000	LMT 1000-PU -17G0-100-1

* F_{2T} Tangential force / feed force – adhere to the permissible tangential force of mating gear
[1] See page 118 for further information on the lubricator and lubrication system
Also available with V-Drive VT+
Application-specific dimensioning with cymex® – www.wittenstein-cymex.com

Pinion designation	Gearbox size	*m* [mm]	*z* [ ]	*x* [ ]	*d* [mm]	d_a [mm]	*A* ± 0.3 [mm]	*b* [mm]	*B* [mm]	L_{12} [mm]	L_{13} [mm]	L_{15} [mm]	L_{16} [mm]	l_{Fq} [mm]
RMS 200-323-16G0-016	SP 060R*	2	16	0.5	32	38.3	39	26	24	52	39	7	27	19
RMS 200-323-19G0-022	SP 075R*	2	19	0.4	38	43.9	41.8	26	24	53	40	8	28	20
RMS 300-323-17G0-032	SP 100R*	3	17	0.4	51	59.6	52.7	31	29	64	48.5	4	34	18.5
RMS 300-323-22G0-040	SP 140R*	3	22	0.2	66	73.4	59.6	31	29	81	65.5	21	51	35.5
RMS 400-323-19G0-040	SP 140R*	4	19	0.3	76	86.6	74.2	41	39	81	60.5	11	41	30.5
RMS 400-323-22G0-055	SP 180S*	4	22	0.2	88	97.8	79.8	41	39	84	63.5	14	44	33.5
RMS 500-323-19G0-055	SP 180S*	5	19	0.4	95	109.2	83.5	51	49	84	58.5	4	34	28.5

* also applies to SK+, SPK+, SPC+
m = Module
z = Number of teeth
d = Pitch circle diameter
x = Profile correction factor
d_a = Tip diameter
Refer to the respective gearbox catalog for the exact gearbox dimensions.

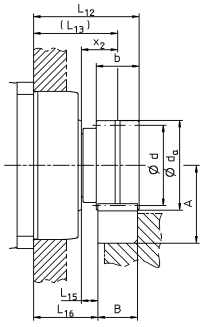

Pinion designation	Gearbox size	*m* [mm]	*z* [ ]	*x* [ ]	*d* [mm]	d_a [mm]	*A* ± 0.3 [mm]	*b* [mm]	*B* [mm]	L_{12} [mm]	L_{13} [mm]	L_{15} [mm]	L_{16} [mm]	l_{Fq} [mm]
RMF 200-443-36G0-050-8xM6	TP 010S-MF*	2	36	0	72	76.2	48	26	24	56	43	1	31	13
RMF 200-443-36G0-063-12xM6	TP 025S-MF*	2	36	0	72	76.2	48	26	24	65	52	11	40	23
RMF 300-443-37G0-080-12xM8	TP 050S-MF*	3	37	0	111	117.2	81.5	31	29	69	53.5	1	39	15.5
RMF 400-443-40G0-125-12xM10	TP 110S-MF*	4	40	0	160	168.2	115	41	39	91	70.5	1	51	20.5
RMF 1000-443-36G0-260-16xM30	TP 4000S-MA	10	36	0	360	380.1	269	101	99	236	185.5	1	136	50.5

* also applies to TK+, TPK+, TPC+
m = Module
z = Number of teeth
d = Pitch circle diameter
x = Profile correction factor
d_a = Tip diameter
Refer to the respective gearbox catalog for the exact gearbox dimensions.

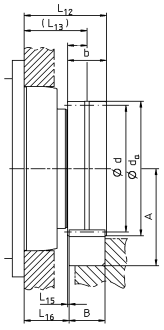

Rotary systems with straight toothing – Advanced Segment

TP+ and TPK+ HIGH TORQUE with straight-toothed RMW preferred pinion

	TP+ / TPK+ HIGH TORQUE						
	010[2]	025	050	110	300	500	
Pinion	F_{2T}* [N]	F_{2T}* [N]	F_{2T}* [N]	F_{2T}* [N]	F_{2T}* [N]	F_{2T}* [N]	**Set consisting of lubrication pinion and axis[1]**
Ordering code							Ordering code
RMW 200-444-22G0-037	3510						LMT 200-PU -17G0-020-1
RMW 200-444-22G0-037		4340					LMT 200-PU -17G0-020-1
RMW 300-444-21G0-055		4200					LMT 300-PU -17G0-030-1
RMW 300-444-21G0-055			11400				LMT 300-PU -17G0-030-1
RMW 400-444-22G0-073			10900				LMT 400-PU -17G0-040-1
RMW 400-444-22G0-073				21900			LMT 400-PU -17G0-040-1
RMW 500-444-21G0-089				21200			LMT 500-PU -17G0-050-1
RMW 500-444-21G0-089					34000		LMT 500-PU -17G0-050-1
RMW 600-444-20G0-106					33000		LMT 600-PU -17G0-060-1
RMW 600-444-20G0-106						44300	LMT 600-PU -17G0-060-1
RMW 800-444-19G0-128						41500	LMT 800-PU -17G0-080-1

* F_{2T} Tangential force / feed force – adhere to the permissible tangential force of mating gear
[1] See page 118 for further information on the lubricator and lubrication system
[2] not with TPK+
Also available with V-Drive VT+
Application-specific dimensioning with cymex® – www.wittenstein-cymex.com

Pinion designation	Gearbox size	*m* [mm]	*z* [ ]	*x* [ ]	*d* [mm]	d_a [mm]	*A* ± 0.3 [mm]	*b* [mm]	*B* [mm]	L_{12} [mm]	L_{13} [mm]	L_{15} [mm]	L_{16} [mm]	l_{Fq} [mm]
RMW 200-444-22G0-037	TP 010S-MA*	2	22	0.3	44	49.5	44.6	26	24	71	50.5	8.5	38.5	20.5
RMW 200-444-22G0-037	TP 025S-MA*	2	22	0.3	44	49.5	44.6	26	24	73.5	53	12	41	24
RMW 300-444-21G0-055	TP 025S-MA*	3	21	0.4	63	71.7	58.7	31	29	76	52.5	9	38	23.5
RMW 300-444-21G0-055	TP 050S-MA*	3	21	0.4	63	71.7	58.7	31	29	89.5	66	13.5	51.5	28
RMW 400-444-22G0-073	TP 050S-MA*	4	22	0.2	88	97.9	79.8	41	39	97	67.5	10	48	29.5
RMW 400-444-22G0-073	TP 110S-MA*	4	22	0.2	88	97.9	79.8	41	39	112.5	83	13.5	63.5	33
RMW 500-444-21G0-089	TP 110S-MA*	5	21	0.4	105	119.3	88.5	51	49	120	85	10.5	60.5	35
RMW 500-444-21G0-089	TP 300S-MA*	5	21	0.4	105	119.3	88.5	51	49	139	104	13.5	79.5	38
RMW 600-444-20G0-106	TP 300S-MA*	6	20	0.4	120	137.1	105.4	61	59	142.5	106	10.5	76.5	40
RMW 600-444-20G0-106	TP 500S-MA*	6	20	0.4	120	137.1	105.4	81	59	155	118.5	14	89	43.5
RMW 800-444-19G0-128	TP 500S-MA*	8	19	0.4	152	174.7	150.2	19	79	174	128.5	14	89	53.5

* also applies to TPK+ HIGH TORQUE
m = Module
z = Number of teeth
d = Pitch circle diameter
x = Profile correction factor
d_a = Tip diameter
Refer to the respective gearbox catalog for the exact gearbox dimensions.

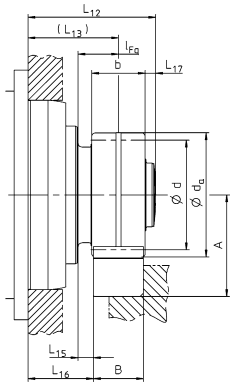

Rotary systems with straight toothing – Premium Segment

RP+, RPM+, RPK+ and RPC+ with straight-toothed RMW preferred pinion

	RP+ / RPM+ / RPK+ / RPC+					
	30	40	50	60	80	
Pinion	F_{2T}* [N]	F_{2T}* [N]	F_{2T}* [N]	F_{2T}* [N]	F_{2T}* [N]	**Set consisting of lubrication pinion and axis[1)]**
Ordering code						Ordering code
RMW 200-444-22G0-037	9950	–	–	–	–	LMT 200-PU -17G0-020-1
RMW 300-444-21G0-055	13800	–	–	–	–	LMT 300-PU -17G0-030-1
RMW 300-444-21G0-055	–	20300	–	–	–	LMT 300-PU -17G0-030-1
RMW 400-444-22G0-073	–	21500	–	–	–	LMT 400-PU -17G0-040-1
RMW 500-444-21G0-073	–	18000	–	–	–	LMT 500-PU -17G0-050-1
RMW 500-444-25G0-106	–	–	47800	–	–	LMT 500-PU -17G0-050-1
RMW 600-444-20G0-106	–	–	48600	–	–	LMT 600-PU -17G0-060-1
RMW 600-444-25G0-128	–	–	–	73000	–	LMT 600-PU -17G0-060-1
RMW 800-444-19G0-128	–	–	–	69400	–	LMT 800-PU -17G0-080-1
RMW 800-444-23G0-156	–	––	–	–	108000	LMT 800-PU -17G0-080-1

* F_{2T} Tangential force / feed force – adhere to the permissible tangential force of mating gear
[1)] See page 118 for further information on the lubricator and lubrication system
RPM+ available in customized version
Also available with V-Drive VT+
Application-specific dimensioning with cymex® – www.wittenstein-cymex.com

XP+, XPK+, XPC+ and PHG R with straight-toothed RMW preferred pinion

	XP+ / XPK+ / XPC+			
	020	030	040	
Pinion	F_{2T}* [N]	F_{2T}* [N]	F_{2T}* [N]	**Set consisting of lubrication pinion and axis[1)]**
Ordering code				Ordering code
RMW 200-444-22G0-033	5600	–	–	LMT 200-PU -17G0-020-1
RMW 200-444-22G0-037	–	8400	–	LMT 300-PU -17G0-030-1
RMW 300-444-21G0-037	–	7400	–	LMT 300-PU -17G0-030-1
RMW 300-444-21G0-055	–	–	10800	LMT 300-PU -17G0-030-1
RMW 400-444-22G0-055	–	–	10800	LMT 400-PU -17G0-040-1
	2	3		
	PHG R			

* F_{2T} Tangential force / feed force – adhere to the permissible tangential force of mating gear
[1)] See page 118 for further information on the lubricator and lubrication system
RPM+ available in customized version
Also available with V-Drive VT+
Application-specific dimensioning with cymex® – www.wittenstein-cymex.com

Pinion designation	Gearbox size	*m* [mm]	*z* [ ]	*x* [ ]	*d* [mm]	d_a [mm]	*A* ± 0.3 [mm]	*b* [mm]	*B* [mm]	L_{12} [mm]	L_{13} [mm]	L_{15} [mm]	L_{16} [mm]	L_{17} [mm]	l_{Fq} [mm]
RMW 200-444-22G0-037	RP 030S*	2	22	0.3	44	49.5	44.6	26	24	83.5	65	12	53	5.5	24
RMW 300-444-21G0-055	RP 030S*	3	21	0.4	63	71.7	58.7	31	29	86	64.5	9	50	6	23.5
RMW 300-444-21G0-055	RP 040S*	3	21	0.4	63	71.7	58.7	31	29	97.6	76	13.5	61.5	6.1	28
RMW 400-444-22G0-073	RP 040S*	4	22	0.2	88	97.9	79.8	41	39	105.1	77.5	10	58	7.1	29.5
RMW 500-444-21G0-073	RP 040S*	5	21	0.4	105	119.3	88.5	51	49	116	83	10.5	58.5	7.5	35
RMW 500-444-25G0-106	RP 050S*	5	25	0.2	125	137.3	97.5	51	49	131.1	98	13.5	73.5	7.6	38
RMW 600-444-20G0-106	RP 050S*	6	20	0.4	120	137.1	105.4	61	59	138.5	100	10.5	70.5	8	40
RMW 600-444-25G0-128	RP 060S*	6	25	0	150	162.3	118	61	59	153.2	113.5	14	84	9.2	43.5
RMW 800-444-19G0-128	RP 060S*	8	19	0.4	152	174.7	150.2	81	79	173	123.5	14	84	9	53.5
RMW 800-444-23G0-156	RP 080S*	8	23	0.2	184	203.5	164.6	81	79	186.6	133.4	14	93.9	12.7	53.5

* also applies to RPM⁺, RPK⁺, RPC⁺
m = Module
z = Number of teeth
d = Pitch circle diameter
x = Profile correction factor
d_a = Tip diameter
Refer to the respective gearbox catalog for the exact gearbox dimensions.

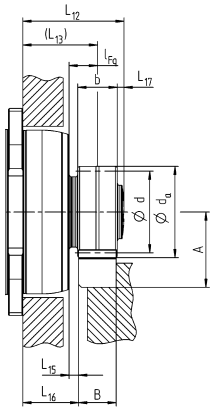

Pinion designation	Gearbox size	*m* [mm]	*z* [ ]	*x* [ ]	*d* [mm]	d_a [mm]	*A* ± 0.3 [mm]	*b* [mm]	*B* [mm]	L_{12} [mm]	L_{13} [mm]	L_{15} [mm]	L_{16} [mm]	L_{17} [mm]	l_{Fq} [mm]
RMW 200-444-22G0-033	XP 020R*	2	22	0.3	44	49.5	44.6	26	24	59.3	40.8	9	28.8	5.5	20
RMW 200-444-22G0-037	XP 030R*	2	22	0.3	44	49.5	44.6	26	24	69.5	51	12	39	5.5	21
RMW 300-444-21G0-037	XP 030R*	3	21	0.4	63	71.7	58.7	31	29	76.5	54	9	39.5	7	24
RMW 300-444-21G0-055	XP 040R*	3	21	0.4	63	71.7	58.7	31	29	75.5	54	9.5	39.5	6	24
RMW 400-444-22G0-055	XP 040R*	4	22	0.2	88	97.9	79.8	41	39	86.5	59	9.5	39.5	7	29

* also applies to XPK⁺, XPC⁺
m = Module
z = Number of teeth
d = Pitch circle diameter
x = Profile correction factor
d_a = Tip diameter
Refer to the respective gearbox catalog for the exact gearbox dimensions.

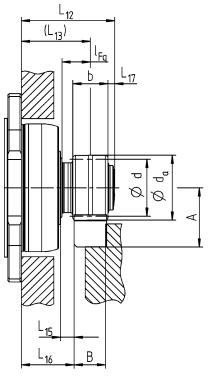

Perfect lubrication – for a perfect system

In order to achieve a long service life, rack and pinion systems require adequate lubrication. We offer different models of lubricators, lubrication pinions and mounting axes, all adapted perfectly to our linear systems. The polyurethane foam lubricating pinion is supplied via a lubricator with a preset grease quantity determined by you. This ensures an optimal lubricating film on the rack and pinion. In addition to the supply of lubricant, the lubricating pinion also ensures cleaning of the open toothing.

Lubricators LUC⁺125 and LUC⁺400
Solutions for decentralized lubrication – a solution you can count on.



Up to 4 outlets with up to 2 different freely controllable lubricant quantities

Time control
Action panel for setting the operating time

Time control (24 V)
Voltage supply via machine control
Feedback signals for motor run, empty cartridge and error messages

Impulse control
Control and voltage supply via machine control system
Feedback signals for motor run, empty cartridge and error messages

Distribution systems
Ideal for integrated lubrication solutions in your application



Lubricating pinion
Perfectly adapted to our rack and pinion systems



High-pressure plastic hose
Pre-filled, suitable for cable tracks



Your benefits

- Ready-to-install solutions – all the required parts are included in the scope of delivery
- Solutions adapted to your application
- With impulse control and 24 V power supply to be fully integrated in the machine control system: lubricant quantities can be precisely adjusted to the application (minimal-quantity lubrication)
- LUC⁺125 with time control and 24 V power supply (optionally battery-powered as stand-alone solution)
- Performance lubricants for different applications
- Significant reduction in maintenance costs
- Exceptionally reliable electromechanical design ensures an extremely long service life for the entire drive system
- Use of cartridges
- By means of splitters, up to 4 (LUC⁺125) or 16 (LUC⁺400) lubrication points can be supplied with only one lubricator
- By means of progressive distributors, up to 8 (LUC⁺125) or 32 (LUC⁺400) lubrication points can be supplied with only one lubricator
- In connection with WITTENSTEIN alpha G13 grease, linear guides and ball screws can also be supplied with lubricant
- WITTENSTEIN alpha G12 grease is also suitable for the food sector



Perfect relubrication for open toothing

Due to the high feed forces which can occur in a rack and pinion drive, the open toothing must be lubricated at all times. Therefore we recommend automatic re-lubrication using our polyurethane lubricating pinions and lubricators. Re-lubrication with the PU lubricating pinion ensures that the lubricant is applied to the toothing continuously and automatically, while the lubricator supplies lubricant whenever it is needed. For this purpose, the lubricating pinion, which is adapted to the toothing of the pinion or rack, engages with the teeth to ensure that the lubricant is transferred to the toothing without load. The open-cell polyurethane foam ensures that the perfect quantity of lubricant is supplied to the toothing, even over extremely lengthy periods. The material stores a quantity of lubricant and dispenses it continuously in minute amounts to prevent wear caused by a lack of lubrication. In order to ensure immediate full functionality of the lubricating pinion and to prevent damage to the drive through dry starting, it must be pre-lubricated!

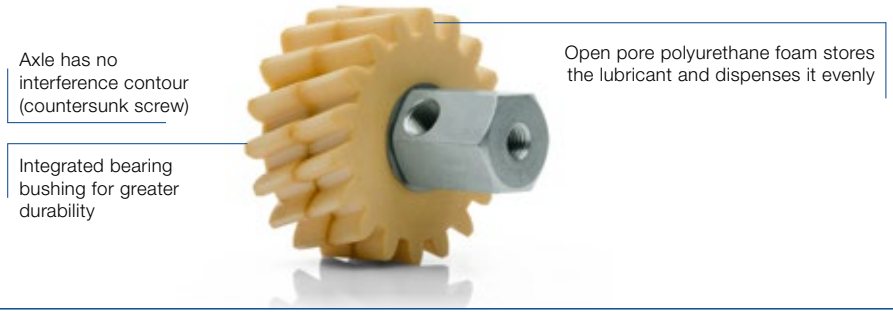

Determining lubrication quantities

The lubrication quantity can be estimated depending on the module and feed speed (valid for axes up to 5 m in length). If you wish to obtain a calculation adapted to your application, contact us on Tel. +49 7931 493-0 (Germany), Tel. +1 630 540-5300 (North America), Tel. +44 1782 286 427 (UK)

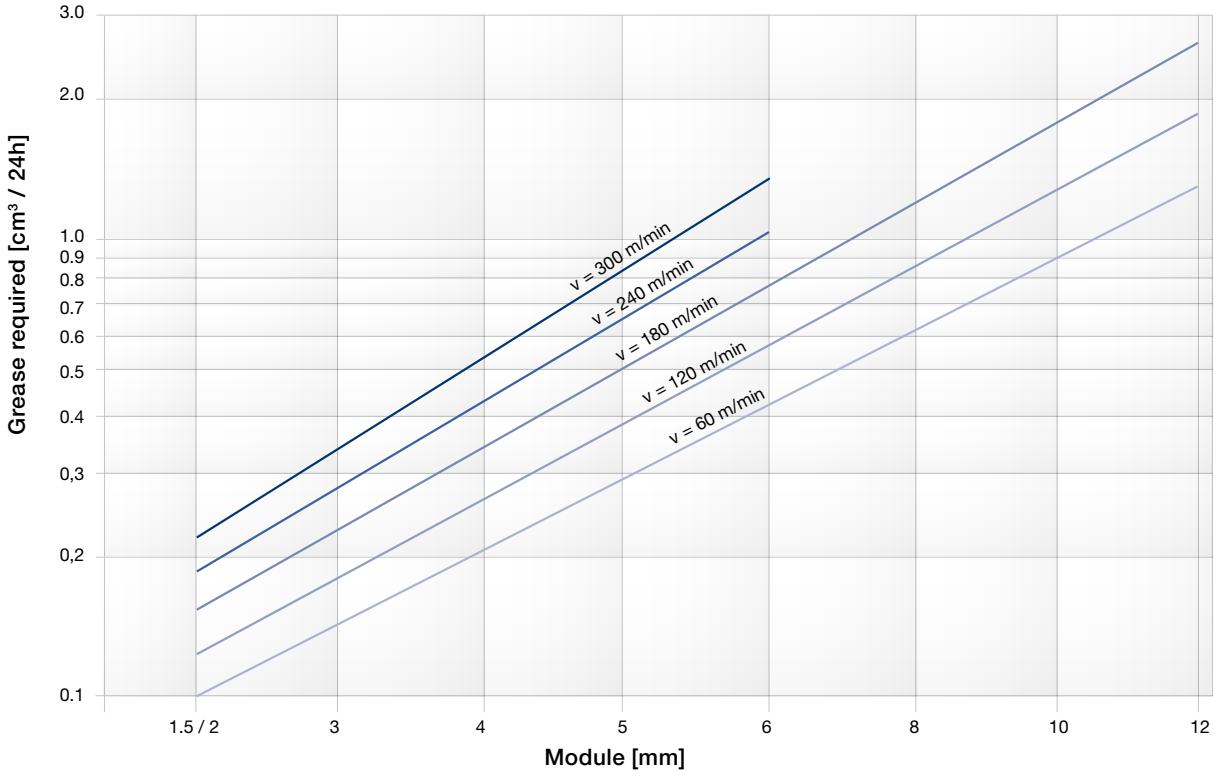

You have the choice – the following lubricants are available for selection:

WITTENSTEIN alpha G11 – Standard grease for open gearing

High-performance grease / adhesive grease for open gearing under extreme loads
- NLGI class 0 – 1
- Long-fibred lithium/calcium complex grease with high pressure additives
- Heat-resistant, good corrosion protection properties
- Does not contain solid lubricants

Available packages: Replacement cartridges LUC⁺125 / LUC⁺400; grease gun cartridge; 18 kg tub

Applications:
- Used together with a lubrication pinion and continuous re-lubrication for open gearing under extreme loads
- Suitable for a wide range of applications due to high-temperature properties

Adapted to



Open gearing

WITTENSTEIN alpha G12 – Special grease for rack and pinion drives, linear guides and ball screws in the food sector

- Extreme-performance grease formulated from overbased calcium sulfonate complex thickener and medical white oil
- High-pressure properties for a wide range of applications
- Thanks to its NSF H-1 certification, the solution is also suitable for HACCP systems (Hazard Analysis Critical Control Points)
- Very high load-carrying capacity
- Water resistance and corrosion protection

Available bundles: Exchange cartridges LUC⁺125 / LUC⁺400; grease gun cartridge

Applications:
- Food, animal feed, medical and pharmaceutical industry
- In combination with a lubrication pinion and continuous relubrication for open toothing
- Lubrication of linear guides and ball screws

Adapted to

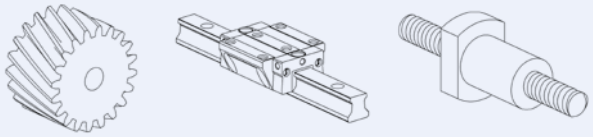

Open gearing | Linear guide | Ball screw

WITTENSTEIN alpha G13 – Special grease for rack and pinion drives, linear guides and ball screws

- Extremely short-fibred and homogeneous, lithium-saponified universal grease containing a mineral oil used to lubricate roller and slide bearings and is suitable for medium to high loads
- Extremely adhesive; suitable for short stroke applications
- Water-resistant and protects against corrosion

Available packages: Replacement cartridges LUC⁺125 / LUC⁺400; grease gun cartridge; 18 kg tub

Applications:
- Used together with a lubrication pinion and continuous re-lubrication for open gearing
- Lubrication of linear guides and ball screws

Adapted to

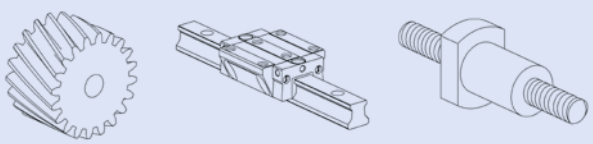

Open gearing | Linear guide | Ball screw

Lubricator LUC+125

Technical data

Weight [1]	660 g
Lubricant volume	125 cm³
Lubricant type	WITTENSTEIN alpha G11, G12, G13
Principle of operation	Piston pump
Maximum pressure	50 bar
Metering volume / stroke [2]	0.15 cm³
No. of outlets	1
Outlet	Straight hose connection 6 mm [3]
Max. number of lubrication points with splitters / progressive distributors	4 / 8
Operating voltage	24 V DC
Current input	300 mA
Fuse	1 A slow-blow
Protection class	IP 54
Operating temperature [4]	0° C to +60° C
Control system	Microelectronic
Pressure monitoring	Integrated, electronic
Fill level monitoring	Integrated, electronic
Communication interface	M12x1, 4-pole
Mounting position	vertical

[1] Depending on the version
[2] 24 V, time-controlled: 1–36 months; number of strokes per lubricating cycle can be adjusted;
24 V, pulse-controlled: lubricating strokes controlled by 2 s pulse signal
[3] Connection thread on lubricator M6x1 IG and G1/4 AG
[4] Depending on the lubricant used

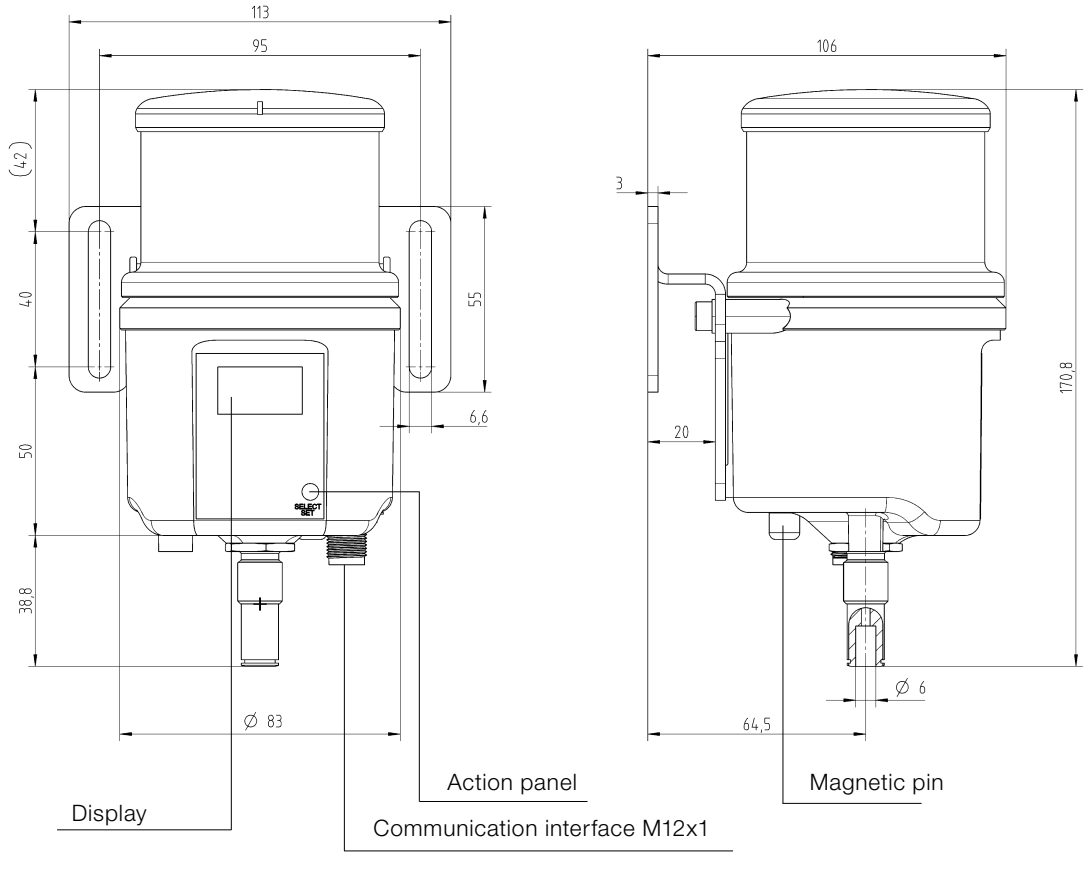

Order information LUC+125

Preferred variants of lubricator LUC+125

Overview of lubricating sets	Control type	Lubricant	Scope of delivery	Material number
LUC+125-0511-02	Pulse-controlled	WITTENSTEIN alpha G11	Prefilled hose 2 m	20100983
LUC+125-0512-02	Time-controlled	WITTENSTEIN alpha G11	Prefilled hose 2 m	20100987
LUC+125-0611-02	Pulse-controlled	WITTENSTEIN alpha G12	Prefilled hose 2 m	20100984
LUC+125-0612-02	Time-controlled	WITTENSTEIN alpha G12	Prefilled hose 2 m	20100988
LUC+125-0711-02	Pulse-controlled	WITTENSTEIN alpha G13	Prefilled hose 2 m	20100985

Further variants, also as battery version on request.
Suitable exchange cartridges can be found on page 126.

Lubricator with external power supply for maximum operational reliability

Using the LUC+125 lubricator with 24 V power supply ensures maximum availability and offers the following advantages:

- The voltage supply of the lubricator is centralized
- When the machine is switched on or off, the lubricator is also switched on or off
- The lubricator can be constantly monitored via the machine control system for maximum operational reliability
- If an empty signal is received, only the empty cartridge must be replaced

Battery versions are primarily intended for supply of self-sufficient non-critical lubrication points which do not need to be monitored and which are only subject to regular visual inspection. If battery versions are to be monitored, a 24 V voltage supply is also required. This makes the use of the battery version obsolete.

We therefore recommend the use of a pulse-controlled or time-controlled 24 V version to ensure operational reliability and sustainability.

Lubricator LUC+400

Technical data

Weight [1]	1700 g
Lubricant volume	400 cm^3
Lubricant type	WITTENSTEIN alpha, G11, G12, G13
Principle of operation	Piston pump
Operating pressure	Max. 70 bar
Metering volume / stroke	0.15 cm^3
No. of outlets [1]	1, 2, 3, 4
Outlet	Rotating, right-angled hose connections 6 mm
Max. number of lubrication points with splitters / progressive distributors	4 / 8 per output
Operating voltage	24 VDC
Current input	I_{max} 300 mA (I_{Ruhe} < 25 mA)
Fuse	750 mA (slow)
Protection class	IP 54
Operating temperature	0° C to +60° C
Control system	Integrated, microelectronic
Pressure monitoring	Integrated, electronic (system pressure measurement)
Fill level monitoring	Integrated, reed contact
Communication interface	Connector, M12x1, 4-pole
Mounting position	vertical or horizontal

[1] Depending on the version

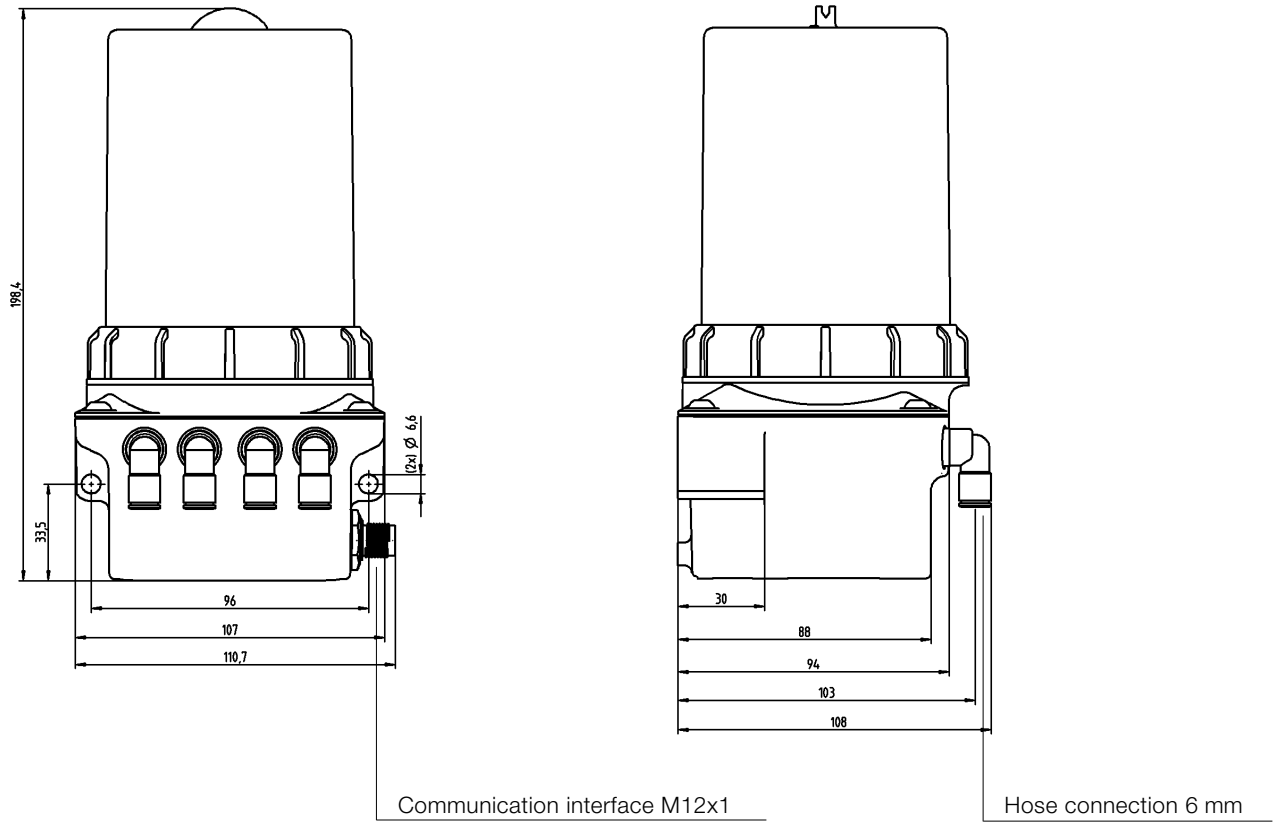

Order information LUC+400

Lubricator LUC+400 – filled with WITTENSTEIN alpha G11

With 2 m hose

Overview of lubrication sets	Outlets	Pump body	Lubricant	Hoses included	Material number
LUC+400-0511-02	1	1	WITTENSTEIN alpha G11	2 m	20058416
LUC+400-0521-02	2	1	WITTENSTEIN alpha G11	2 x 2 m	20058418
LUC+400-0531-02	3	2	WITTENSTEIN alpha G11	3 x 2 m	20058420
LUC+400-0541-02	4	2	WITTENSTEIN alpha G11	4 x 2 m	20058422
LUC+400-0551-02	2	2	WITTENSTEIN alpha G11	2 x 2 m	20058424

Lengths up to 10 m max. per outlet possible via hose connector 6-0 and LUH hose.

With 5 m hose

Overview of lubrication sets	Outlets	Pump body	Lubricant	Hoses included	Material number
LUC+400-0511-05	1	1	WITTENSTEIN alpha G11	5 m	20058417
LUC+400-0521-05	2	1	WITTENSTEIN alpha G11	2 x 5 m	20058419
LUC+400-0531-05	3	2	WITTENSTEIN alpha G11	3 x 5 m	20058421
LUC+400-0541-05	4	2	WITTENSTEIN alpha G11	4 x 5 m	20058423
LUC+400-0551-05	2	2	WITTENSTEIN alpha G11	2 x 5 m	20058425

Lengths up to 10 m max. per outlet possible via hose connector 6-0 and LUH hose.

Lubricator LUC+400 – filled with WITTENSTEIN alpha G12

Overview of lubrication sets	Outlets	Pump body	Lubricant	Hoses included	Material number
LUC+400-0611-05	1	1	WITTENSTEIN alpha G12	5 m	20061470
LUC+400-0621-05	2	1	WITTENSTEIN alpha G12	2 x 5 m	20061468
LUC+400-0631-05	3	2	WITTENSTEIN alpha G12	3 x 5 m	20061473
LUC+400-0641-05	4	2	WITTENSTEIN alpha G12	4 x 5 m	20061475

Lubricator LUC+400 – filled with WITTENSTEIN alpha G13

With 2 m hose

Overview of lubrication sets	Outlets	Pump body	Lubricant	Hoses included	Material number
LUC+400-0711-02	1	1	WITTENSTEIN alpha G13	2 m	20059848
LUC+400-0721-02	2	1	WITTENSTEIN alpha G13	2 x 2 m	20059849
LUC+400-0731-02	3	2	WITTENSTEIN alpha G13	3 x 2 m	20059851
LUC+400-0741-02	4	2	WITTENSTEIN alpha G13	4 x 2 m	20059853
LUC+400-0751-02	2	2	WITTENSTEIN alpha G13	2 x 2 m	20059856

Lengths up to 10 m max. per outlet possible via hose connector 6-0 and LUH hose.

With 5 m hose

Overview of lubrication sets	Outlets	Pump body	Lubricant	Hoses included	Material number
LUC+400-0711-05	1	1	WITTENSTEIN alpha G13	5 m	20059813
LUC+400-0721-05	2	1	WITTENSTEIN alpha G13	2 x 5 m	20059850
LUC+400-0731-05	3	2	WITTENSTEIN alpha G13	3 x 5 m	20059852
LUC+400-0741-05	4	2	WITTENSTEIN alpha G13	4 x 5 m	20059854
LUC+400-0751-05	2	2	WITTENSTEIN alpha G13	2 x 5 m	20059856

Lengths up to 10 m max. per outlet possible via hose connector 6-0 and LUH hose.

Accessories for LUC+125 and LUC+400

Replacement cartridges for LUC+125

Designation	Lubricant	Filling quantity	Material number
LUE+125-05-1	WITTENSTEIN alpha G11	125 cm^3	20068231
LUE+125-06-1	WITTENSTEIN alpha G12	125 cm^3	20068233
LUE+125-07-1	WITTENSTEIN alpha G13	125cm^3	20068236

Replacement cartridges for LUC+400

Designation	Lubricant	Filling quantity	Material number
Replacement cartridge LUE+400-05-1	WITTENSTEIN alpha G11	400 cm^3	20058120
Replacement cartridge LUE+400-06-1	WITTENSTEIN alpha G12	400 cm^3	20058121
Replacement cartridge LUE+400-07-1	WITTENSTEIN alpha G13	400 cm^3	20058122

Pre-filled hoses

Designation	Lubricant	Type	Hose diameter [mm]	Material number
Hose 2 m, LUH-02-05 [a)]	WITTENSTEIN alpha G11	2 m	6	20058134
Hose 5 m, LUH-05-05 [a)]	WITTENSTEIN alpha G11	5 m	6	20058135
Hose 2 m, LUH-02-07 [a)]	WITTENSTEIN alpha G13	2 m	6	20058138
Hose 5 m, LUH-05-07 [a)]	WITTENSTEIN alpha G13	5 m	6	20058139
Hose connector 6-0	–	Straight	6	20058148

[a)] Hoses pre-filled. Only use air-free pre-filled hoses!

Lubricants

Designation	Lubricant	Filling quantity	Material number
Grease gun cartridge, LGC-400-05	WITTENSTEIN alpha G11	400 cm^3	20058111
Grease gun cartridge, LGC-400-06	WITTENSTEIN alpha G12	400 cm^3	20058112
Grease gun cartridge, LGC-400-07	WITTENSTEIN alpha G13	400 cm^3	20058113
Hobbock / tub, LUB 18-05	WITTENSTEIN alpha G11	18 kg	20065366
Hobbock / tub, LUB 18-07	WITTENSTEIN alpha G13	18 kg	20065524

Hose connectors / communication interface connection

Designation	Thread/connection	Type	Hose diameter [mm]	Material number
Hose connection G1/4-6-0	G 1/4"	Straight	6	20058144
Hose connection M06-6-1	M6x1	Angled	6	20058145
Hose connection M10-6-0	M10x1	Straight	6	20070402
Hose connection G1/8-6-1	G 1/8"	Angled	6	20058146
Hose connection M10x1-6-1	M10x1	Angled	6	20061741
Hose connection G1/4-6-1	G 1/4"	Angled	6	20058147
Angled connector 24V, 4-pin	M12x1	Angled	-	20058149

Other versions available on request

Distribution systems

Distributor systems are primarily intended for distribution of the lubricant supplied by the lubricator to several lubrication points. This makes it possible to centrally supply complete machines from one single lubricator. Depending on the requirements of the distribution system, splitters or progressive distributors can be applied. Progressive distributors can also be used to dispense different quantities of lubricants. For example, the same outlet of the lubricator can be used for lubrication of the pinion / rack and the linear guide.

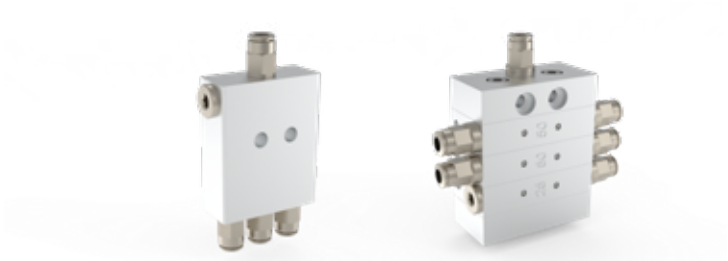

Splitter

Progressive distributor

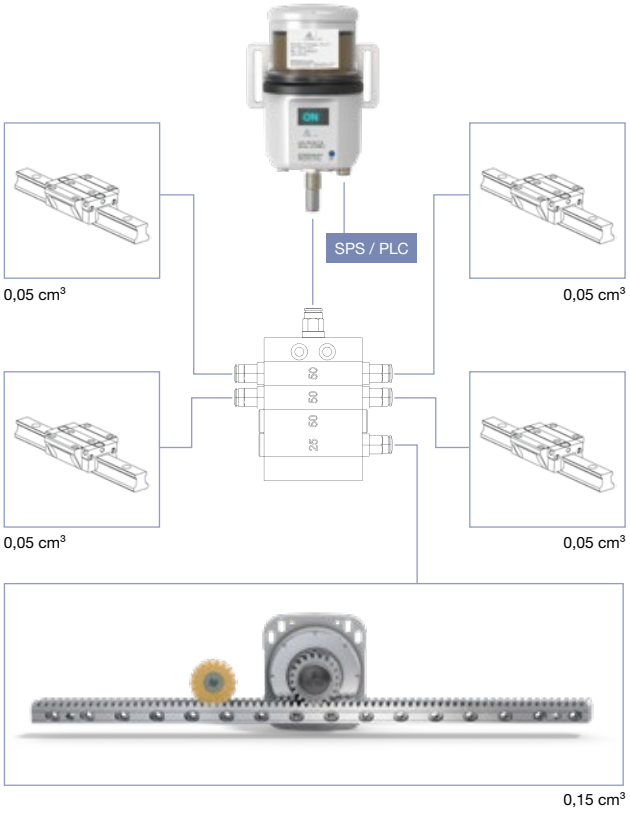

Splitter

Splitters evenly divide the lubricant volume between 2, 3 or 4 outlets. This function is realized by means of chokes leading to a pressure difference of approx. 10 bar between the inlet and outlet of the splitter. The outlets are equipped with integrated non-return valves to prevent backflow of lubricants.

Application conditions:

- Max. hose length between lubricator LUC+ and splitter inlet 300 mm
- Comparable lengths of the hoses at the outlet (+/-10 % difference)
- Comparable back pressures at the lubrication point
- Identical line cross sections at the outlet
- Straight hose connection at inlet and outlet
- For hose Ø 6 mm
- Operating temperature +10 °C to +60 °C (please see technical data sheet of lubricant)
- Approved lubricants: WITTENSTEIN alpha G11, G12, G13
- Splitters are vented with food grade H1 grease. Before commissioning, flushing with several pulses of the lubricator is recommended
- Splitters must not be set up in a cascaded arrangement

Progressive distributor

Progressive distributors sequentially distribute lubricant to the outlet by means of follower piston control of individual distributor discs (2–8 outlets available as standard). The outlets are equipped with integrated non-return valves to prevent backflow of the lubricant.

Application conditions:

- Use of a pulse-controlled lubricator LUC+125/400
- The hose length from the lubricator LUC+ to the distributor inlet should be as short as possible (max. 2000 mm)
- Max. length difference of hoses at the outlet 2.5 m
- Identical line cross sections at the outlet
- Straight hose connection at inlet and outlet
- For hose Ø 6 mm
- Operating temperature +10 °C to +60 °C (please see technical data sheet of lubricant)
- Approved lubricants: WITTENSTEIN alpha G11, G12, G13
- Progressive distributors are vented with food grade H1 grease. Before commissioning, flushing with several pulses of the lubricator is recommended
- Progressive distributors must not be set up in a cascaded arrangement
- Project-related individual solutions available on request

Progressive distributor

Symmetrical distributors – identical lubricant delivery per outlet

Designation	Quantity ratio	Circulation monitoring	Circulation volume [cm^3]	No. of outlets	Material number
LUP -02-0-01-030-0	1:1	-	0.30	2	20082711
LUP -03-0-01-030-0	1:1	-	0.30	3	20082712
LUP -04-0-01-020-0	1:1	-	0.20	4	20082713
LUP -05-0-01-025-0	1:1	-	0.25	5	20082714
LUP -06-0-01-030-0	1:1	-	0.30	6	20082715
LUP -07-0-01-035-0	1:1	-	0.35	7	20082716
LUP -08-0-01-040-0	1:1	-	0.40	8	20082717
LUP -02-1-01-030-0	1:1	x	0.30	2	20082718
LUP -03-1-01-030-0	1:1	x	0.30	3	20082719
LUP -04-1-01-020-0	1:1	x	0.20	4	20082720
LUP -05-1-01-025-0	1:1	x	0.25	5	20082721
LUP -06-1-01-030-0	1:1	x	0.30	6	20082722
LUP -07-1-01-035-0	1:1	x	0.35	7	20082723
LUP -08-1-01-040-0	1:1	x	0.40	8	20082724

Please observe the detailed information in the data sheets and dimension sheets available on request

Asymmetrical distributors – deviating lubricant delivery at one outlet

Designation	Quantity ratio	Circulation monitoring	Circulation volume [cm^3]	No. of outlets	Material number
LUP -05-0-03-035-1	1:3	-	0.35	4	20082725

Please observe the detailed information in the data sheets and dimension sheets available on request

Splitter

Designation	Hose connection	No. of outlets	Hose diameter [mm]	Material number
Splitter LUS 2-0-NL	Straight / plug-in	2	6	20058103
Splitter LUS 3-0-NL	Straight / plug-in	3	6	20058104
Splitter LUS 4-0-NL	Straight / plug-in	4	6	20058105

Dimensions of lubricating pinion and mounting axis

Set consisting of lubrication pinion and lubrication axis

Module [mm]	z	Flank direction	Use	*d* [mm]	d_2 [mm]	d_3 [2] [mm]	d_K [mm]	*b* [mm]	*L* [mm]	l_1 [mm]	l_2 [mm]	*SW* [mm]	Ordering code	Material number
1.5	24	Left	Rack	38.2	M8	M10x1	41.2	20	51.4	30	10	24	LMT 150-PU -24L1-020-1	20064005
		Right	Pinion										LMT 150-PU -24R1-020-1	20064007
		Straight	Pinion / Rack	36	M8	M10x1	39	20	51.4	30	10	24	LMT 150-PU -24G0-020-1	20064003
2	18	Left	Rack	38.2	M8	M10x1	42.2	24	55.4	30	10	24	LMT 200-PU-18L1-024-1	20053903
		Right	Pinion										LMT 200-PU-18R1-024-1	20053904
	17	Straight	Pinion / Rack	34	M8	M10x1	38	20	51.4	30	10	24	LMT 200-PU -17G0-020-1	20056502
3	18	Left	Rack	57.3	M8	M10x1	63.3	30	61.4	30	10	24	LMT 300-PU-18L1-030-1	20053905
		Right	Pinion										LMT 300-PU-18R1-030-1	20053906
	17	Straight	Pinion / Rack	51	M8	M10x1	57	30	61.4	30	10	24	LMT 300-PU -17G0-030-1	20056503
4	18	Left	Rack	76.4	M8	M10x1	84.4	40	71.4	30	10	24	LMT 400-PU-18L1-040-1	20053907
		Right	Pinion										LMT 400-PU-18R1-040-1	20053908
	17	Straight	Pinion / Rack	68	M8	M10x1	76	40	71.4	30	10	24	LMT 400-PU -17G0-040-1	20056504
5	17	Left	Rack	90.2	M8	M10x1	100.2	50	81.4	30	10	24	LMT 500-PU-17L1-050-1	20053909
		Right	Pinion										LMT 500-PU-17R1-050-1	20053910
		Straight	Pinion / Rack	85	M8	M10x1	95	50	81.4	30	10	24	LMT 500-PU -17G0-050-1	20056505
6	17	Left	Rack	108.2	M8	M10x1	120.2	60	91.4	30	10	24	LMT 600-PU-17L1-060-1	20053911
		Right	Pinion										LMT 600-PU-17R1-060-1	20053912
		Straight	Pinion / Rack	102	M8	M10x1	114	60	91.4	30	10	24	LMT 600-PU -17G0-060-1	20056506
8	17	Left	Rack	144.3	M8	M10x1	160.3	80	111.4	30	10	24	LMT 800-PU-17L1-080-1	20053913
		Right	Pinion										LMT 800-PU-17R1-080-1	20053914
		Straight	Pinion / Rack	136	M8	M10x1	152	80	111.4	30	10	24	LMT 800-PU -17G0-080-1	20056507

Straight connector for hose Ø 6x4 mm included in the scope of delivery. Lubrication pinions must be pre-greased before start-up. Please observe the notes in the operating manual.
z = Number of teeth
[2] Hose connection G1/8“ also compatible

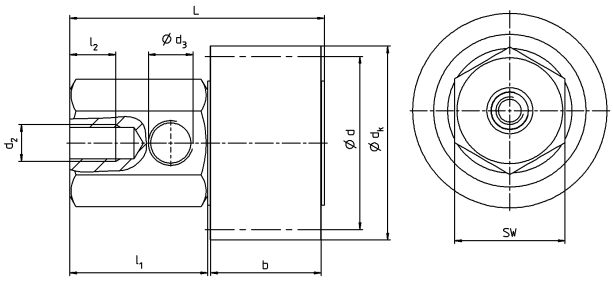

Lubricating pinion

Module [mm]	Number of teeth	Flank direction	Use	*d* [mm]	d_1 [mm]	d_K [mm]	*b* [mm]	Ordering code	Material number
1.5	24	Left	Rack	38.2	12	41.2	20	RLU 150-PU-24L1-020	20063900
	24	Right	Pinion	38.2	12	41.2	20	RLU 150-PU-24R1-020	20063898
	24	Straight	Rack / Pinion	36	12	39	20	RLU 150-PU-24G0-020	20063902
2	18	Left	Rack	38.2	12	42.2	24	RLU 200-PU-18L1-024	20053683
	18	Right	Pinion	38.2	12	42.2	24	RLU 200-PU-18R1-024	20053684
	17	Straight	Rack / Pinion	34	12	38	20	RLU 200-PU-17G0-020	20056509
3	18	Left	Rack	57.3	12	63.3	30	RLU 300-PU-18L1-030	20053685
	18	Right	Pinion	57.3	12	63.3	30	RLU 300-PU-18R1-030	20053686
	17	Straight	Rack / Pinion	51	12	57	30	RLU 300-PU-17G0-030	20056510
4	18	Left	Rack	76.4	12	84.4	40	RLU 400-PU-18L1-040	20053687
	18	Right	Pinion	76.4	12	84.4	40	RLU 400-PU-18R1-040	20053688
	17	Straight	Rack / Pinion	68	12	76	40	RLU 400-PU-17G0-040	20056511
5	17	Left	Rack	90.2	20	100.2	50	RLU 500-PU-17L1-050	20053689
	17	Right	Pinion	90.2	20	100.2	50	RLU 500-PU-17R1-050	20053690
	17	Straight	Rack / Pinion	85	20	95	50	RLU 500-PU-17G0-050	20056512
6	17	Left	Rack	108.2	20	120.2	60	RLU 600-PU-17L1-060	20053691
	17	Right	Pinion	108.2	20	120.2	60	RLU 600-PU-17R1-060	20053692
	17	Straight	Rack / Pinion	102	20	114	60	RLU 600-PU-17G0-060	20056513
8	17	Left	Rack	144.3	20	160.3	80	RLU 800-PU-17L1-080	20053693
	17	Right	Pinion	144.3	20	160.3	80	RLU 800-PU-17R1-080	20053694
	17	Straight	Rack / Pinion	136	20	152	80	RLU 800-PU-17G0-080	20056514

Lubricating pinions must be soaked in lubricant before operation.

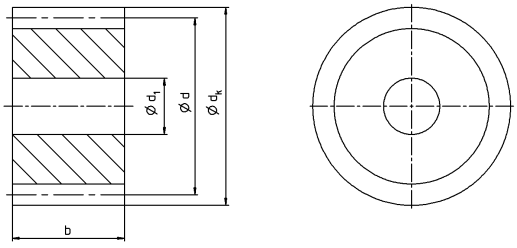

Mounting axis, right-angle

Module [mm]	d_1 [mm]	d_2 [mm]	Connection thread d_3 [2] [mm]	b [mm]	L [mm]	l_1 [mm]	l_2 [mm]	SW [mm]	Ordering code	Material number
1.5	12	M8	M10x1	20	51.4	30	10	24	LAS-020-012-1	20056520
2	12	M8	M10x1	24	55.4	30	10	24	LAS-024-012-1	20053696
2 [1]	12	M8	M10x1	20	51.4	30	10	24	LAS-020-012-1	20056520
3	12	M8	M10x1	30	61.4	30	10	24	LAS-030-012-1	20053698
4	12	M8	M10x1	40	71.4	30	10	24	LAS-040-012-1	20053700
5	20	M8	M10x1	50	81.4	30	10	24	LAS-050-020-1	20053702
6	20	M8	M10x1	60	91.4	30	10	24	LAS-060-020-1	20053704
8	20	M8	M10x1	80	111.4	30	10	24	LAS-080-020-1	20053706

Straight connection for hose Ø 6x4 mm included in scope of delivery
[1] Only compatible with straight-toothed lubricating pinions
[2] Hose connection G1/8“ also compatible

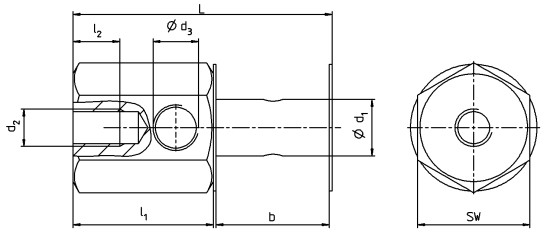

Mounting axis, straight

Module [mm]	d_1 [mm]	d_2 [mm]	Connection thread d_3 [2] [mm]	b [mm]	L [mm]	l_1 [mm]	l_2 [mm]	SW [mm]	Ordering code	Material number
1.5	12	M10	M6	20	61.2	30	10	15	LAS-020-012-0	20056539
2	12	M10	M6	24	65	30	10	15	LAS-024-012-0	20053695
2 [1]	12	M10	M6	20	61.2	30	10	15	LAS-020-012-0	20056539
3	12	M10	M6	30	71	30	10	15	LAS-030-012-0	20053697
4	12	M10	M6	40	81	30	10	15	LAS-040-012-0	20053699
5	20	M16	M10x1 [2]	50	116.4	49	10	24	LAS-050-020-0	20053701
6	20	M16	M10x1 [2]	60	126.4	49	10	24	LAS-060-020-0	20053703
8	20	M16	M10x1 [2]	80	146.4	49	10	24	LAS-080-020-0	20053705

Straight connection for hose Ø 6x4 mm included in scope of delivery
[1] Only compatible with straight-toothed lubricating pinions
[2] Hose connection G1/8“ also compatible

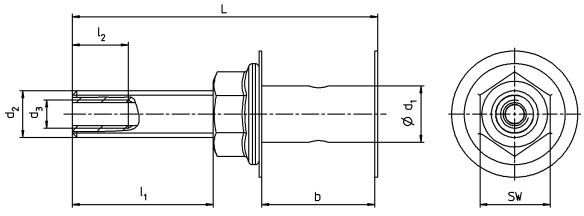

Rack and pinion assembly and mechanical system installation



The assembly quality decides

To achieve maximum compliance with the required properties of alpha Linear Systems in terms of smooth running, precision and feed force, it is not only important to use high-quality components, but the products must also be installed properly for the respective application.

In addition to our operating manuals, we offer detailed utility videos for users. These utility videos show clearly show the assembly steps described in the operating manual. Thanks to user-friendly navigation features and buttons, they can be easily watched and consulted during assembly, for example on a tablet.

System assembly with INIRA® clamping, adjusting and pinning

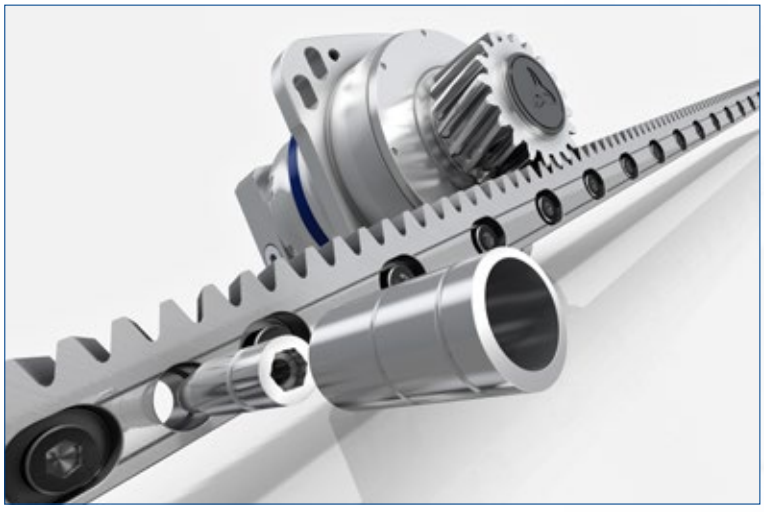

System-Assembly with standard racks and INIRA® pinning

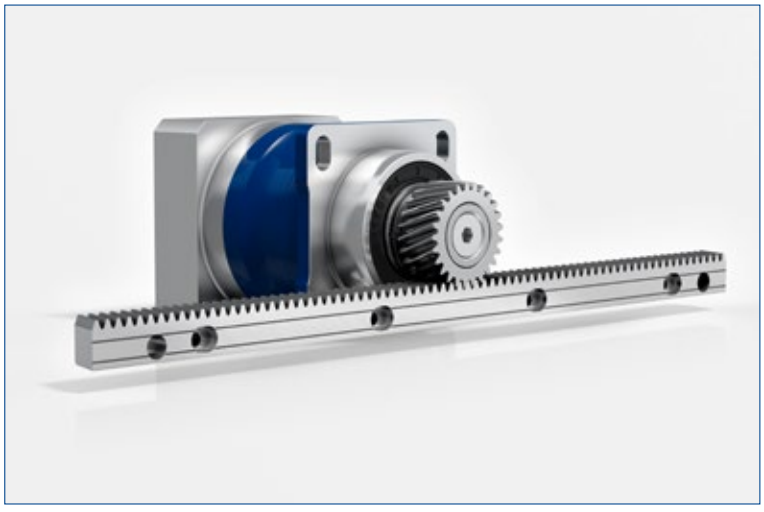

alpha.wittenstein.de/rack-assembly

Accessories – Standard rack installation

Assembly jig

You will need an assembly jig to align the transfers between the individual racks.



Module [mm]	*L* [mm]	Ordering code	Material number
1.5	100	ZMT 150-PD5-100	20064154
2	100	ZMT 200-PD5-100	20020582
3	100	ZMT 300-PD5-100	20021966
4	156	ZMT 400-PD5-156	20037466
5	156	ZMT 500-PD5-156	20037469
6	156	ZMT 600-PD5-156	20037470
8	240	ZMT 800-PB6-240	20052289

Needle roller

High-precision needle rollers are required when checking during and after assembly using the dial gauge.

Module [mm]	Material number
1.5	20006839
2	20001001
3	20000049
4	20038001
5	20038002
6	20038003
8	20052298

In addition to accessories for the standard rack assembly, the following section also presents INIRA® assembly accessories for maximum assembly efficiency.

Accessories – INIRA® rack assembly

INIRA® clamping: determining the required screw length

The screw-in depth of the fastening screws used on racks is based on the shear strength τ_B of the inner thread material. Screws with property class 12.9 must be used to fasten racks. The required shear strength can be calculated with reference to VDI 2230.

The correct screws are included in the scope of delivery of the rack with INIRA® clamping. Please select the most suitable screw length for your application using the table below and complete the rack ordering code accordingly.



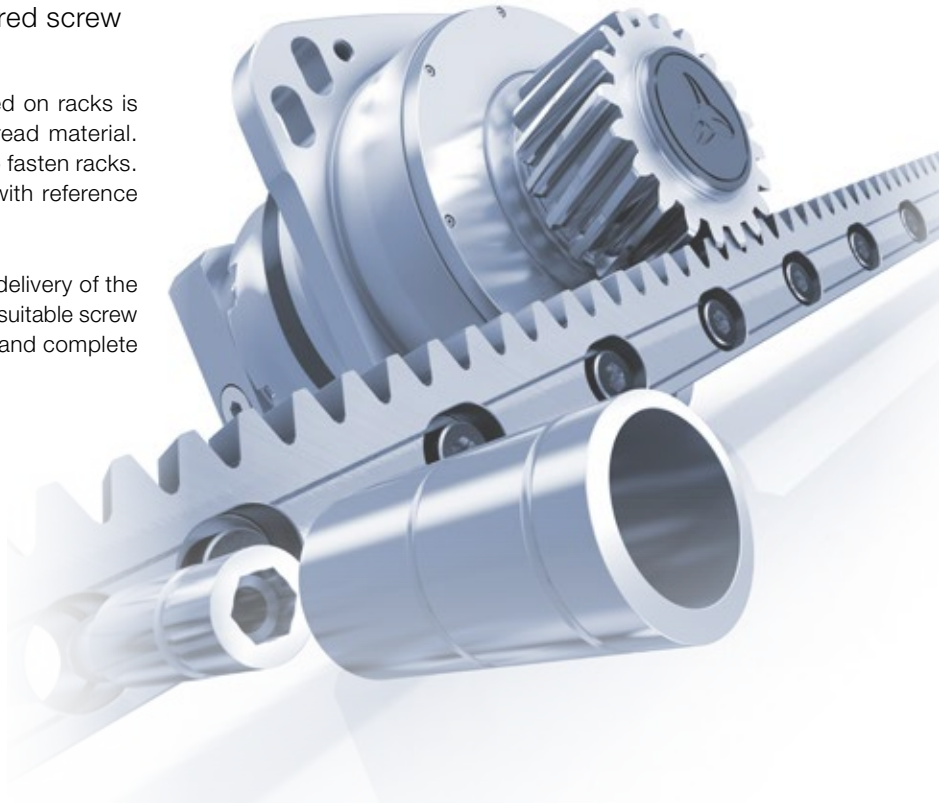

		τ_B > 300 N/mm²		τ_B > 200 N/mm²		
		S355	306 N/mm²	S235	216 N/mm²	**Mounting base material**
		35S20	324 N/mm²	EN-GJL-250	275 N/mm²	
		C45+N	372 N/mm²	EN-GJL-300	270 N/mm²	
		C45+QT	420 N/mm²	EN-AW-AlSiMgMn	201–300 N/mm²	
		42CrMoV4+QT	600 N/mm²			
		EN-GJS-400	360 N/mm²			
Rack, module [mm]	2	M6x30		M6x35		**INIRA® screws, thread x length* [mm]**
	3	M8x35		M8x45		
	4	M10x45		M10x50		
	5	M12x60		M12x65		
	6	M16x70		M16x80		

* Further screw lengths available on request.

Rack

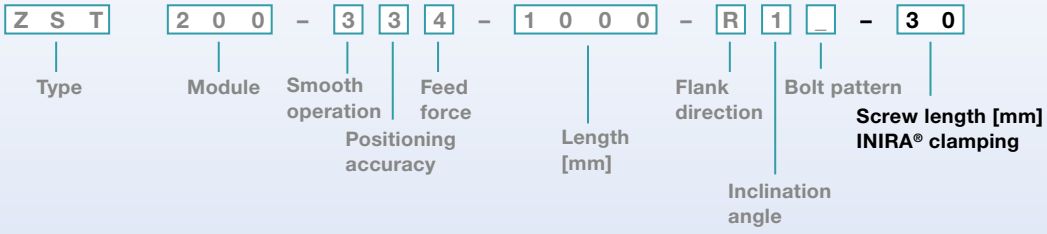

INIRA® tool kit

The INIRA® tool kit contains a host of useful tools for mounting racks efficiently. You can choose the most suitable set based on the rack variant selected.
All essential special tools are included:
1 x assembly jig for approximate adjustment of the rack transition
1 x adjusting tool for precise adjustment of the rack transition
16 x clamping sleeves for clamping the rack to the mounting surface quickly and efficiently
8 x needle or cylinder rollers for monitoring the roller dimension during assembly

Module [mm]	Use	Ordering code	Material number
2	Hole distance 62.5 mm	ZMTK 200 C	20066211
	Hole distance 125 mm	ZMTK 200 D	20066212
3	Hole distance 62.5 mm	ZMTK 300 C	20066213
	Hole distance 125 mm	ZMTK 300 D	20066214
4	Hole distance 62.5 mm	ZMTK 400 C	20066215
	Hole distance 125 mm	ZMTK 400 D	20066216
5	Hole distance 62.5 mm	ZMTK 500 C	20066217
	Hole distance 125 mm	ZMTK 500 D	20066218
6	Hole distance 62.5 mm	ZMTK 600 C	20066219
	Hole distance 125 mm	ZMTK 600 D	20066220



Adjustment tool INIRA® adjusting

Even if you have only selected the INIRA® pinning variants, you can still use the adjustment tool. You can choose the most suitable adjustment tool based on the selected rack variant.

Module [mm]	Use	Ordering code	Material number
2	Hole distance 62.5 mm	IZMT 200 C	20066196
	Hole distance 125 mm	IZMT 200 D	20066198
3	Hole distance 62.5 mm	IZMT 300 C	20066199
	Hole distance 125 mm	IZMT 300 D	20066200
4	Hole distance 62.5 mm	IZMT 400 C	20067988
	Hole distance 125 mm	IZMT 400 D	20066202
5	Hole distance 62.5 mm	IZMT 500 C	20067992
	Hole distance 125 mm	IZMT 500 D	20066204
6	Hole distance 62.5 mm	IZMT 600 C	20066205
	Hole distance 125 mm	IZMT 600 D	20066206



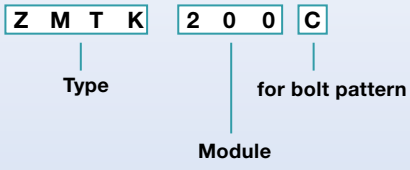

Glossary – the **alpha**bet

Acceleration torque (T_{2B})

The acceleration torque T_{2B} is the torque that the gearbox toothing can permanently transmit. To calculate the acceleration torque, ar → **coefficient of impact** which is appropriate for the application must also be taken into account.

Adapter plate

WITTENSTEIN alpha uses a system of standardized adapter plates for connecting the motor and gearbox. This makes it as simple as possible to attach motors from any manufacturer to WITTENSTEIN alpha gearboxes.

Angle of rotation

Angle by which the connection element of the coupling rotates under the torque load. The admissible angle of rotation for torsionally rigid couplings is < 0.05° and for vibration-damping couplings < 5°.

Angular minute

A degree is subdivided into 60 angular minutes (= 60 arcmin = 60‘).

Example:
If the backlash is j_t = 1 arcmin, the output may rotate by 1/60°. The impacts on the application are determined by the arc length: $b = 2 \cdot \pi \cdot r \cdot \alpha° / 360°$.

Example:
A pinion with a radius r = 50 mm mounted on a gearbox with a backlash of j_t = 3 arcmin can be rotated by b = 0.04 mm.

Angular misalignment

Angular misalignment of drive and output shaft. In most cases due to assembly. Causes an increased strain on the coupling.

Axial force (F_{2AMax})

An axial force on a gearbox runs parallel to its output shaft or perpendicular to its output flange. Under certain circumstances, it acts offset from the axis with a lever arm y_2 In this case, it also creates a bending moment. If the axial force exceeds the permissible catalog values (max. axial force F_{2AMax}), an additional component (e.g. axial bearing) must be provided to absorb these forces.

Example with output shaft and flange:

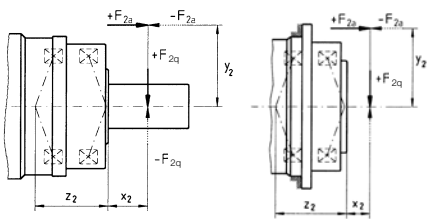

Axial misalignment

Length variation along the longitudinal axes of the drive and output shaft. Generally caused by thermal expansion.

Axial spring rigidity (C_a)

Counter-force of the coupling in the event of axial misalignment [N/mm]. This additional force should be taken into consideration in the sizing of the drive train and bearings.

Backlash-free

Changes in the rotational speed, direction of rotation or torque do not cause any backlash and thus no shocks in the coupling. However, it should be noted that an → ***angle of rotation*** still occurs.

Bushing

If the diameter of the motor shaft is smaller than the → **clamping hub**, a bushing is used to compensate for the difference in diameter. A minimum wall thickness of 1 mm and a motor shaft diameter of 2 mm difference are required.

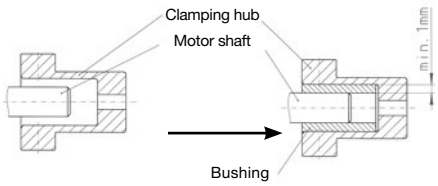

CAD POINT

Performance data, dimension sheets and CAD data for all gearboxes can be found online in our CAD POINT, including clear documentation of the selection.
(www.wittenstein-cad-point.com)

Clamping hub (couplings)

The clamping hub ensures a friction contact connection between the coupling and the gearbox shaft as well as with the application. Clamping hubs are available in all motor shaft diameters; therefore, a bushing as connection piece is not required and also not recommended. Optionally, a form fit connection via a key is also possible.

Clamping hub (gearbox)

The clamping hub ensures a friction contact connection between the motor shaft and gearbox. If the diameter of the motor shaft is smaller than the diameter of the clamping hub, a → **bushing** is used as a connection piece.

For gearboxes in the alpha Advanced Line and the alpha Premium Line, a form fit connection via a key is also possible.

Connection between the clamping hub and the metal bellows

For metal bellows couplings which transmit torques of up to 500 Nm, the stainless steel bellow is bonded onto the clamping hub. In the event of higher torques, the connection is welded.

Continuous operation (S1)

In continuous operation, it is particularly important to ensure that the maximum gearbox temperature is maintained (see temperature behavior). For optimum drive behavior in continuous operation, we recommend our HIGH SPEED gearbox model.

Cyclic operation (S5)

The cyclic operation is defined via the → **duty cycle** If the duty cycle is less than 60% and shorter than 20 minutes, it qualifies as cyclic operation **(→ operating modes)**.

cymex®

cymex® is the calculation software developed by our company for dimensioning complete drive trains. The software enables the precise simulation of motion and load variables. The software is available to download from our website (www.wittenstein-cymex.de). We can also provide training to enable you to make full use of all the possibilities provided by the software.

cymex® select

The cymex® select quick layout tool from WITTENSTEIN alpha allows for efficient and innovative product selection in seconds and is available online.
You get suitable recommendations for your application and your motor in no time based on technical and economic suitability.
(cymex-select.wittenstein-group.com)

Degrees of protection (IP)

The various degrees of protection are defined in DIN EN 60529 “Degrees of protection offered by enclosures (IP code)”. The IP degree of protection (International Protection) is represented by two digits. The first digit indicates the protection against the ingress of impurities and the second is the protection against the ingress of water.

Example: **IP65**

Protection against the ingress of dust (dust-proofness)	Protection against water jets

Disengagement torque (T_{Dis})

Adjustable torque of torque limiters with which the coupling separates the drive and output side of the system.

Duty cycle (DC)

The cycle determines the duty cycle (DC). The times for acceleration (t_b), constant travel if applicable (t_c) and deceleration (t_d) ombined yield the duty cycle in minutes.
The duty cycle is expressed as a percentage with inclusion of the dwell time t_e.

$$DC\ [\%] = \left[\frac{t_b + t_c + t_d}{t_b + t_c + t_d + t_e}\right] \cdot 100 \qquad \frac{\text{Motion duration}}{\text{Cycle time}}$$

$$DC\ [\text{min}] = t_b + t_c + t_d$$

Dynamic torsional rigidity (C_{Tdyn})

Torsional rigidity with T_N

Efficiency (η)

The efficiency [%] η is the ratio of output power to input power. Power lost through friction reduces efficiency to less than 1 or 100%.

$$\eta = P_{off} / P_{on} = (P_{on} - P_{loss}) / P_{on}$$

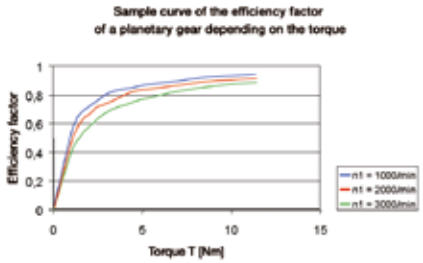

WITTENSTEIN alpha always indicates the efficiency of a gearbox during operation at full load. If the input power or torque is lower, the efficiency rating is also lower due to the constant no-load torque. Power losses do not increase as a result. A lower efficiency is also to be expected at high speeds (see figure).

Emergency stop torque (T_{2Emer})

The emergency stop torque T_{2Emer} is the maximum permissible torque at the gearbox output. It must not be reached more than 1000 times during the service life of the gearbox. It must never be exceeded!
The following cases in particular should be checked: controlled emergency stop, power failure, brake application, and crash.

Ex symbol

Devices bearing the Ex symbol comply with EU Directive 94 / 9 / EC (ATEX) and are approved for use in defined explosion-hazardous zones.
Detailed information on the explosion group and category, as well as further information on the respective gearbox, is available upon request.

Food-grade lubrication (F)

These products are designed with food-grade lubrication and can therefore be used in the food industry. It is important to note the reduction in torque compared to the standard. (V-Drive excluded). See cymex® 5 or the CAD POINT for the exact torques.

HIGH SPEED (MC)

The HIGH SPEED version of our gearbox has been specifically developed for applications in continuous operation at high input speeds. It is used, for example, in the printing and the packaging industry.

HIGH TORQUE (MA)

WITTENSTEIN alpha gearboxes are also available in a HIGH TORQUE version. These gearboxes are particularly suitable for applications requiring extremely high torques and maximum rigidity.

Hysteresis curve

The hysteresis is measured to determine the torsional rigidity of a gearbox. The result of this measurement is known as the hysteresis curve.

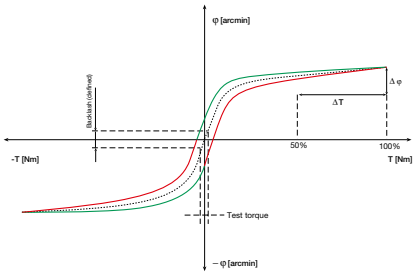

If the input shaft is locked, the gearbox is continuously loaded and relieved at the output in both directions of rotation up to a defined torque. The angle of rotation is plotted against the torque. This yields a closed curve from which the **→ backlash** and **→ torsional rigidity** can be calculated.

Jerk (j)

The jerk is the derivative of the acceleration with respect to time, that is, the change in acceleration in a unit of time. It is referred to as a shock if the acceleration curve shows a jump, i.e. the jerk is infinitely large.

Lateral force (F_{2QMax})

The maximum lateral force F_{2QMax} [N] iis the force component that acts perpendicular to the output shaft or parallel to the output flange. It acts perpendicular to the **→ axial force** and can have an axial distance x_2 to the shaft shoulder or to the shaft flange that acts as a lever arm. The lateral force creates a side load (also see **→ axial force**).

Glossary – the **alpha**bet

Lateral misalignment

Parallel misalignment of the drive and output shaft. Causes an additional strain on the bearings and other components of the drive train.

Lateral spring rigidity (C_l)

Counter-force of the coupling in the event of lateral misalignment [N/mm]. This additional force should be taken into consideration in the sizing of the drive train and bearings.

Load factor (f_s) (gearbox)

The maximum admissible acceleration torque (T_{2B}) indicated in the catalog in cyclic operation applies to less than 1000 cycles/h. Greater numbers of cycles in connection with shorter acceleration times can lead to oscillations in the drive train. The resulting excessive torque increases are taken into consideration with the load factor f_s berücksichtigt.
WITTENSTEIN alpha suggests taking these unknown overloads into account using the following curve.
This determined value is multiplied by the actual acceleration torque T_{2b} before it is compared with the maximum permissible acceleration torque T_{2B}.
($T_{2b} \cdot f_s = T_{2b}$, $f_s < T_{2B}$)

The following applies to gearboxes:

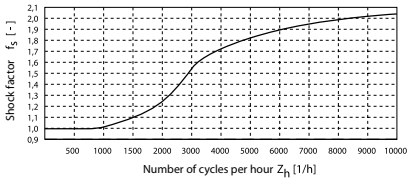

The following applies to couplings:

Number of cycles Z_h [1/h]	Metal bellow couplings and torque limiters	Elastomer couplings
< 1000	1.0	1.0
< 2000	1.1	1.2
< 3000	1.2	1.4
< 4000	1.8	1.8
> 4000	2.0	2.0

Mass moment of inertia (J)

The mass moment of inertia J [kg/cm^2] is a measurement of the effort applied by an object to maintain its momentary condition (at rest or moving).

Maximum torque ($T_{2\alpha}$)

$T_{2\alpha}$ represents the maximum torque that can be transmitted by the gearbox. Depending on application-specific boundary conditions and the precise evaluation of the motion profile, the gearbox may be operated with a maximum torque $T_{2b,fs}$ above the specified maximum acceleration torque T_{2B} (See diagram 3.) For detailed sizing, please use cymex cymex©
$T_{2alpha} \geq T_{2b,fs} \geq T_{2B}$

No-load running torque (T_{012})

The no-load running torque T_{012} is the torque which must be applied to a gearbox in order to overcome the internal friction; it is therefore considered lost torque. The WITTENSTEIN alpha catalog values are determined at a speed $n_1 = 3.000$ min^1 and an ambient temperature of 20°C.

T_{012}: 0 (no load) 1→2 (from input side toward output side)

No-load running torques decrease during operation.

NSF

Lubricants certified as grade H1 by the NSF (National Sanitation Foundation) can be used in the food sector where occasional unavoidable contact with food cannot be excluded.

Operating modes (continuous operation **S1** and cyclic operation **S5**)

Gearboxes are selected depending on whether the motion profile is characterized by frequent acceleration and deceleration phases in → **cyclic operation** (S5) as well as dwell times, or whether it is designed for → **continuous operation** (S1), i.e. with long phases of constant motion.

Operating noise (L_{PA})

The gear ratio and speed influence the operating noise. As a general rule, the higher the speed, the higher the operating noise and the higher the gear ratio, the lower the operating noise. Our catalog specifications refer to a reference gear ratio and speed. The reference speed is n_1 = 3000 rpm or n_1 = 2000 rpm. depending on the size of the gearbox Ratio-specific values can be found in cymex® - www.wittenstein-cymex.com

Output shaft revolution (f_α)

The factor f_α determines the number of service life cycles for the required service life of the gearbox. It describes the number of revolutions at the output to assess the permissible torque at the output.

Positioning accuracy

The positioning accuracy is determined by the angular deviation from the setpoint and is the sum of the load-dependent **→ (torsional rigidity and torsional backlash)** and kinematic **→ (synchronization)** angles of rotation that occur simultaneously in practice.

Quality control

All Premium and Advanced gearboxes at WITTENSTEIN alpha are subjected to an outgoing inspection before they leave the factory. This ensures that every gearbox is delivered within specification.

Ratio (i)

The ratio i indicates the factor by which the gearbox transforms the three relevant parameters of motion (speed, torque and mass moment of inertia).
The factor is a result of the geometry of the toothing elements (example.: $i = 10$).

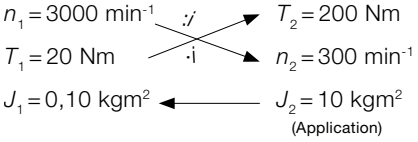

Ratio of mass moment of inertia (λ = lambda)

The ratio of mass moment of inertia λ is the ratio of external inertia (application side) to internal inertia (motor and gearbox side). It is an important parameter determining the controllability of an application. Accurate control of dynamic processes becomes more difficult with increased differing mass moments of inertia and as λ becomes greater. WITTENSTEIN alpha recommends that a guideline value of $\lambda < 5$ is maintained. A gearbox reduces the external mass moment of inertia by a factor of $1/i^2$.

$$\lambda = \frac{J_{external}}{J_{internal}}$$

$J_{external}$ reduced to input:

$$J'_{external} = J_{external} / i^2$$

Simple applications ≤ 10
Dynamic applications ≤ 5
Highly dynamic applications ≤ 1

Safety instruction

For applications with special safety requirements (e.g. vertical axes, distorted gear inputs) we recommend exclusively employing our Premium and Advanced products (V-Drive excluded).

Servo actuators

In addition to a high-precision planetary gearbox, the servo actuator is equipped with a powerful, permanent magnet synchronous servo motor, which ensures high power density and a high speed stability thanks to the distributed winding. This enables even more compact and powerful linear drives to be realized. The investment costs for the drive train and the ongoing operating costs can be positively influenced by downsizing. The goal is to achieve a smaller input and therefore a smaller servo controller and lower energy consumption with the same productivity. A low mass moment of inertia combined with higher rigidity is the way to achieve this.

Shaft misalignment

One main function of the coupling is the compensation of the shaft misalignment which occurs in almost all applications between the drive and the output side. A distinction is made between →**axial**, →**lateral**- and →**angular misalignment**. When complying with the indicated maximum misalignment, the couplings are safe for the duration of their service life.

Slipping torque

With a smaller clamping hub diameter, it is possible that the transmittable torque of the shaft-hub connection is lower than the maximum accelerating torque T_B of the coupling. In particular, this is applicable to the series BC3, BCT Standard, EL6 and ELC. More detailed information is available on request.

Speed (*n*)

The permitted maximum speed n_{1Max} must be compared with the maximum speed n_{1max} during operation. The maximum permissible speed n_{1Max} must not be exceeded at any time.

The average speed n_{1m} is determined as the arithmetic mean of the speeds in the cycle or over a maximum of 20 minutes. It must be below the permitted nominal speed n_{1N} at all times. This applies to both cyclic and continuous operation.

$$n_{1m} = \frac{|n_{1,0}| \cdot t_0 + \ldots + |n_{1,n}| \cdot t_n}{t_0 + \ldots + t_n} \text{ with } \sum_0^n t_n \leq 20\text{min incl. pause time}$$

WITTENSTEIN alpha determines the thermal speed limit or thermal limit of the nominal speed in the laboratory at an ambient temperature of 20°C while maintaining a gearbox temperature of 90°C.

speedline® delivery

If required, standard series can be delivered within 24 or 48 hours ex works. Fast deliveries at short notice thanks to a high level of flexibility

Spring rigidity (C)

Counter-force of the coupling in the event of axial or lateral misalignment [N/mm]. A distinction is made between →**axial** and →**lateral spring rigidity.**

Static torsional rigidity (C_{Tstat})

Torsional rigidity at 50 % T_N

Synchronous run

The synchronous run refers to the measurable variation in speed between the input and output during one revolution of the output shaft. It is caused by manufacturing tolerances and results in ratio fluctuations within one revolution.

Technical data

Further technical data for our complete product portfolio is available to download from our website.

Temperature factor (f_t)

With elastomer couplings, the ambient temperature impacts the maximum admissible accelerating torque of the coupling. This is taken into consideration in the coupling design by means of the temperature factor f_t. The temperature factor depending on the elastomer insert used can be determined by means of the table.

	Elastomer insert			Metal bellows
Temperature °C	A	B	C	
> -30 to -10	1.5	1.3	1.4	1.0
> -10 to +30	1.0	1.0	1.0	1.0
> +30 to +40	1.2	1.1	1.3	1.0
> +40 to +60	1.4	1.3	1.5	1.0
> +60 to +80	1.7	1.5	1.8	1.0
> +80 to +100	2.0	1.8	2.1	1.0
> +100 to +120	-	2.4	-	1.0

Glossary – the **alpha**bet

Thermal behavior - temperature

It is necessary to measure the maximum temperature of the gearbox in the application.
The gearbox temperature is significantly influenced by the following application-specific factors:

- Load spectrum with nominal torque and nominal speed
- Motor temperature (e.g. heat input from the motor)
- Heat dissipation to the machine interface (e.g. mounting on a stainless steel structure or very thin mounting plates)
- Convection (e.g. convection prevented by installation location)
- Ambient temperature (e.g. excessively high ambient temperature of the air and the mechanical interface parts)

If the permissible gearbox temperature is exceeded, the service life of the gearbox is reduced considerably.

Tilting moment (M_{2k})

The tilting moment M_{2k} is a result of the →**axial and lateral forces** applied and their respective force application points in relation to the inner radial bearing on the output side.

Tilting rigidity

The tilting rigidity C_{2K} of the gearbox is made up of the bending rigidity of the output or pinion shaft and the bearing stiffness of the output bearing. It is defined as a quotient of the tilting moment M_{2K} [Nm] and tilting angle Φ [arcmin] ($C_{2K} = M_{2K}/\Phi$).

Tooth engagement frequency (f_z)

In certain circumstances, the tooth engagement frequency can lead to vibration problems in the application, specifically if the excitation frequency corresponds to a natural frequency of the applications. For planetary gearboxes from WITTENSTEIN alpha (exception: gearboxes with ratio i = 8) the tooth engagement frequency can be calculated using the formula $f_z = 1{,}8 \cdot n_2$ [min^{-1}]
It is independent of the ratio in planetary gearboxes from Wittenstein alpha. If it does prove problematic, either the natural frequency of the system can be changed or a different gearbox (e.g. hypoid gearbox) with a different tooth engagement frequency can be chosen.

Torsional backlash (j_t)

Torsional backlash j_t [arcmin] describes the maximum angle of rotation of the output shaft in relation to the input. In simple terms, the torsional backlash describes the distance between two tooth flanks.

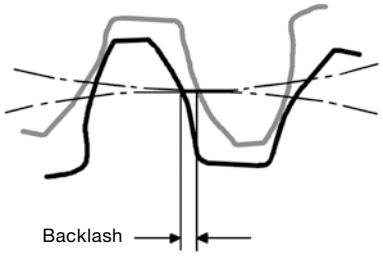

The measurement is taken with the input shaft blocked.

The output is then loaded with a defined test torque in order to overcome the internal gearbox friction. The main influence of the backlash is the flank backlash between the teeth. The low torsional backlash of the WITTENSTEIN alpha gearbox is achieved through high manufacturing precision and selective combination of the toothed wheels.

Torsional rigidity (C_{t21}) (gearbox)

The torsional rigidity [Nm/arcmin] C_{t21} is defined as the quotient of applied torque and resulting angle of rotation ($C_{t21} = \Delta T/\Delta\Phi$). It indicates the torque required to turn the output shaft by one angular minute. The torsional rigidity can be determined using the →**hysteresis curve** Torsional rigidity C, angle of rotationl Φ

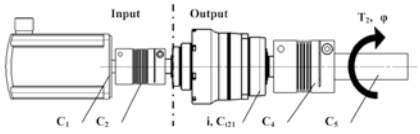

Reduce all torsional rigidity to the output:

$C_{(n),ab} = C_{(n),an} * i^2$

with i = gearbox ratio [-]
$C_{(n)}$ = Individual rigidities [Nm/arcmin]

Note: The torsional rigidity C_{t21} for the gearbox always relates to the output.

Series connection of torsional rigidities

$1/C_{ges} = 1/C_{1,ab} + 1/C_{2,ab} + \ldots + 1/C_{(n)}$

Angle of rotation Φ [arcmin]
$\Phi = T_2 * 1/C_{ges}$
with T_2 = output torque [Nm]

Torsional rigidity (C_T) (couplings)

The torsional rigidity [Nm/arcmin] C_T is defined as the quotient of applied torque and resulting angle of rotation. It shows the torque required to turn the two clamping hubs against each other by one angular minute. If the maximum value is exceeded, the coupling can no longer transmit the applied torque since the →***angle of rotation*** of the coupling becomes too large. A distinction is made between →***static*** and →***dynamic torsional rigidity***.

Torque ($T_{2\alpha}$)

$T_{2\alpha}$ represents the maximum torque that can be transmitted by the gearbox. This value may be reduced depending on application-specific boundary conditions and the precise evaluation of the motion profile.



Glossary – Formulæ

Formulae

Torque [Nm]	$T = J \cdot \alpha$	J = Mass moment of inertia [kgm^2] α = Angular acceleration [1/s^2]
Torque [Nm]	$T = F \cdot l$	F = Force [N] l = Lever, length [m]
Acceleration force [N]	$F_b = m \cdot a$	m = Mass [kg] a = Linear acceleration [m/s^2]
Frictional force [N]	$F_{Reib} = m \cdot g \cdot \mu$	g = Acceleration due to gravity 9.81 m/s^2 μ = Coefficient of friction
Angular speed [1/s]	$\omega = 2 \cdot \pi \cdot n / 60$	n = Speed [rpm] π = PI = 3.14...
Linear speed [m/s]	$v = \omega \cdot r$	v = Linear speed [m/s] r = Radius [m]
Linear speed [m/s] (spindle)	$v_{sp} = \omega \cdot h / (2 \cdot \pi)$	h = Screw pitch [m]
Linear acceleration [m/s^2]	$a = v / t_b$	t_b = Acceleration time [s]
Angular acceleration [1/s^2]	$\alpha = \omega / t_b$	
Pinion path [mm]	$s = m_n \cdot z \cdot \pi / \cos \beta$	m_n = Normal module [mm] z = Number of teeth [-] β = Helix angle [°]

Conversion table

1 mm	= 0.039 in
1 Nm	= 8.85 in.lb
1 kgcm²	= 8.85 x 10^{-4} in.lb.s^2
1 N	= 0.225 lb_f
1 kg	= 2.21 lb_m

Symbol

Symbol	Unit	Designation
C	Nm/arcmin	Stiffness
ED	%, min	Duty cycle
F	N	Force
f_s	–	Load factor
f_e	–	Factor for duty cycle
i	–	Ratio
j	arcmin	Backlash
J	kgm^2	Mass moment of inertia
K1	Nm	Factor for bearing calculation
L	h	Service life
L_{PA}	dB(A)	Operating noise
m	kg	Mass
M	Nm	Torque
n	rpm	Speed
p	–	Exponent for bearing calculation
η	%	Efficiency
t	s	Time
T	Nm	Torque
v	m/min	Linear speed
z	1/h	Number of cycles

Index

Index	Designation
Capital letter	Permissible values
Small letter	Actual values
1	Input
2	Output
A/a	Axial
B/b	Acceleration
c	Constant
d	Deceleration
e	Pause
h	Hours
K/k	Tilting
m	Mean
Max/max	Maximum
Mot	Motor
N	Nominal
Not/not	Emergency stop
0	No load
Q/q	Lateral
t	Torsional
T	Tangential

Drive design

Various types of rack and pinion systems are used depending on the application. In addition to a single drive for simple movements and positioning tasks, backlash-free, electrically preloaded drives (master/slave) are often used for precision applications, and rack and pinion systems in a gantry arrangement are used for large machines with guides positioned far apart (e.g. wide tables or portals).

	Single drive	Gantry	Master/slave (electrically preloaded)	Gantry master/slave (electrically preloaded)
Design	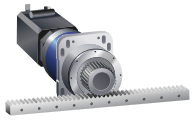	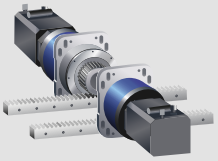	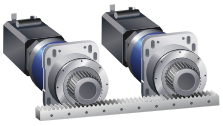	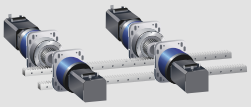
Backlash	Present	Present	Backlash free	Backlash free
Applications	Secondary requirements for positioning accuracy	Movement of large masses with guides positioned far apart	Backlash-free drive systems for high-precision machines	Backlash-free drive systems for high-precision machines and moving large masses

Master/slave (electrically preloaded)

Backlash-free rack and pinion or pinion gear ring drives can be realized with the master/slave. In principle, these are two drives operated synchronously like a gantry system (electric master shaft). Here, the control system establishes a digital connection between the drives with an adjustable and mostly constant torque difference. The master/slave and the optimum preload can be sized with cymex® 5.

The preload increases the operating rigidity of the drive compared to drives that are not preloaded (better controllability). Electric preload is not dependent on geometric manufacturing and installation tolerances. Drives in a master/slave arrangement can be adjusted with extreme flexibility and ensure maximum precision throughout the entire service life as well as maximum dynamics.

By contrast, manufacturing and installation inaccuracies in mechanically preloaded systems change the preload distance. Preloading can only be adjusted for one pinion position on the rack or gear ring. In any other position of the pinion on the rack or gear ring, preload force fluctuations of more than ± 50 % may occur with the usual tolerances.

Flexibilities must be integrated into the system so that constraining forces resulting from tolerance fluctuations occurring during mechanical preloading of the drive system do not cause any damage. Although these flexibilities compensate for any geometric deviations, the positioning accuracy and dynamic behavior of the system do suffer as a result. High-precision and dynamic machines require rack and pinion drives with electrical preload.

Preload F_v

The preload F_v of an electrically preloaded rack and pinion system (master/slave) is the force with which the two preloaded drives exert pressure on the rack and one another at zero speed without any influence from external forces. Ideally, the preload is defined based on the required process parameters. Alternatively, the preload can be estimated based on experience with similar machines. In servo control systems, the preload for a drive is usually entered as a percentage of the motor nominal torque or the reference torque. The preload on the load side calculated for the process can be recalculated using the gearbox ratio without taking into account the degree of efficiency on the motor side.

$$\pm F_v \cdot \frac{d}{2} \cdot \frac{1}{i} = \pm T_{v,\,motor} \qquad \frac{T_v}{T_{N,\,motor}} = \textit{Preload}\ [\%] \qquad T_{N,\,motor} = \textit{Motor nominal torque}$$

Loads

The tangential or feed force F_t transferred by the linear system is essentially comprised of the following components under consideration of the system efficiency:

Acceleration force F_a

Horizontal axes: $F_a = m \cdot a$

Vertical axes: $F_a = m \cdot (a+g)$

with:

m…movable mass

a… acceleration

g… gravity

Process force F_p

The machine or system developer must determine the process force F_p for the respective application.

Frictional force F_r

$F_r = m \cdot g \cdot \mu$

Empirical values from known applications are frequently used for friction value F_r or friction value μ.

Preload force F_v

For preloaded rack and pinion systems (e.g. electrically preloaded master/slave systems), the pretension between the drives must be taken into consideration.

System efficiency η_S

The efficiency of all system components must be taken into consideration when sizing rack and pinion systems. The degrees of efficiency specified by WITTENSTEIN alpha always relate to a specific working point. The system efficiency of a rack and pinion system is influenced among others by the feed force, feed speed, temperature, preload force and lubricating conditions.

$\eta_S = \eta_1 \cdot \eta_2 \cdot \ldots \cdot \eta_n$

Bearing of the output pinion

WITTENSTEIN alpha always uses bearings in a cantilever manner for output pinions. The bearing in a cantilever manner allows greater freedom in configuring the drive system (see Design for X, page 148) and sizing the mounting base. Load distribution and rigidity are controlled reliably in the statically defined system and optimized for rack and pinion applications.



Design constraints in the pinion geometry and restrictions regarding installation space are generally encountered on systems with a counter bearing. The static redundancy of the system results in technical shortcomings such as unpredictable load distribution, ineffectiveness of the counter bearing due to radial bearing clearance, preload on the pinion shaft due to position deviations at the different bearing points as well as additional lubrication and sealing points on the counter bearing.

The load distribution in the statically redundant system with counter bearing is dependent on the rigidity of the system components as well as the manufacturing and installation tolerances achieved. If the design is more rigid, the required geometric tolerances are more demanding. Conversely, if the design is more flexible, the positioning accuracy and dynamic behavior of the machine will suffer.

Case hardening

In addition to induction-hardened racks, WITTENSTEIN alpha offers a wide range of high-performance case-hardened racks. Case hardening produces a sufficient strength profile. The perfect combination of a close contour hardened edge layer and tough core structure generates maximum flank and tooth strength. The high-quality base material and subsequent case hardening enable the transmission of extremely high feed forces.

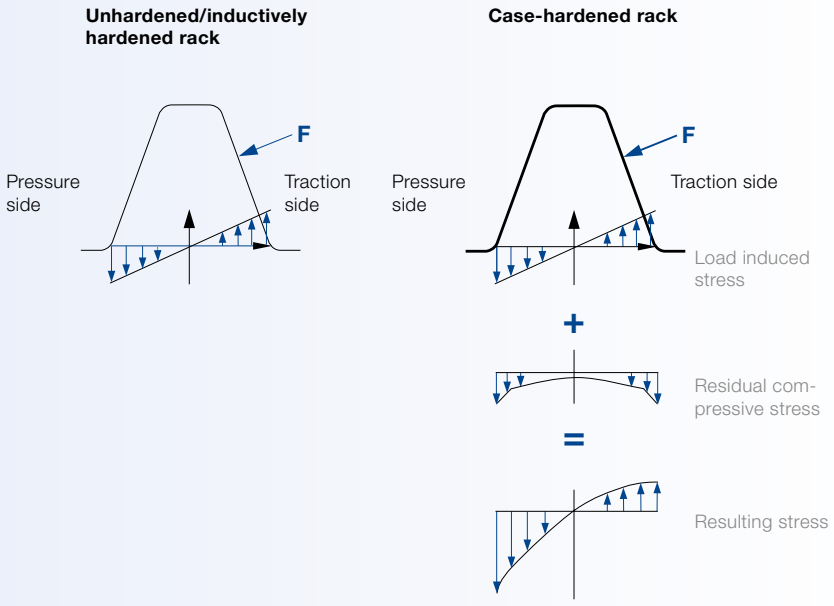

Bolt connection

In addition to the long-established bolt pattern of unhardened and induction-hardened racks with 125 mm hole distance, WITTENSTEIN alpha has introduced an optimized bolt pattern with 62.5 mm hole distance for transmitting the high feed forces of case-hardened racks. The larger number of screws with the same screw diameter, the more favorable clamping length ratio and consistent rack geometry lead to a compression which is distributed evenly along the entire length of the rack. The perfect friction connection prevents gliding effects and ensures that even the highest feed forces are transmitted reliably. Although the material thickness between the toothing and fastening hole remains unchanged, the area around the tooth root is not weakened and its strength does not diminish.

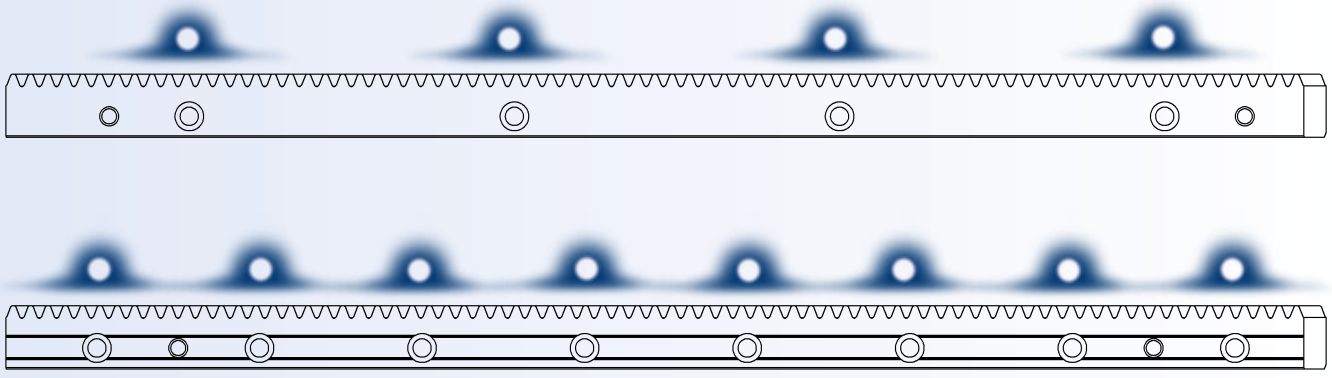

Compression distribution determined in technical tests using pressure measuring foils with conventional and optimized bolt pattern.

Pin connection

Racks are pinned to protect against overloading. The pins prevent the rack from sliding at high loads e.g. during a crash or emergency situation. This can cause an alignment or pitch error at the transition between two racks and ultimately result in the failure of the entire rack and pinion drive system. In safety-relevant axes that are subject to extreme loads, the pinning of racks is essential in eliminating the risk of potential failure as well as availability risks.

Module *m*, pitch *p*

The module is a length which describes the size of the toothing. It cannot be measured directly at the gear or rack, but is calculated according to the following formula:

$$m_t = \frac{p_t}{\pi} = \frac{d}{z}$$

The reference circle pitch p_t is the length of the pitch circle curve (gear) or the pitch line (rack) between two consecutive right or left flanks of the same name.

For helical toothing $m_t = \frac{m_n}{\cos\beta}$ $p_t = \frac{p_n}{\cos\beta}$

For straight toothing $m = m_t = m_n$ $p = p_t = p_n$

Flank direction, helix angle

If the tooth flanks on a toothing run from the bottom left (right) to top right (left) viewed from the tooth tips, the flank direction is towards the right (left). A helix angle associated with a right-handed flank direction is considered positive while a helix angle associated with a left-handed flank direction is considered negative.



Left Straight Right

Pitch circle diameter

The pitch circle diameter of the output pinion is calculated as follows:

$$d = m_t \cdot z = \frac{m_n}{\cos\beta} \cdot z$$

Unlike a spur gear pairing, in the special case of rack and pinion the pitch diameter is equal to the pitch circle diameter.

Profile correction

Some output pinions from WITTENSTEIN alpha are available with a positive profile correction. Here the basic profile is moved from the pitch circle towards the tooth tip, which produces a modified tooth shape with larger tip and root circle diameters. The pitch circle diameter remains unchanged. For pinions with a small number of teeth, profile correction is used to avoid an undercut and increase the tooth strength. Profile correction is calculated by multiplying the addendum modification factor x by the normal module mn of the toothing. The profile correction changes the axis distance (see "Axis distance A between rack and pinion").

Axis distance A between rack and pinion

The axis distance between the rack and pinion is measured from the rotation axis of the pinion to the rear surface of the rack. It consists of an axis component of the pinion a1 and an axis distance component of the rack a_2.

The following applies for toothings with a sta dard basic tooth profile according to DIN 867:

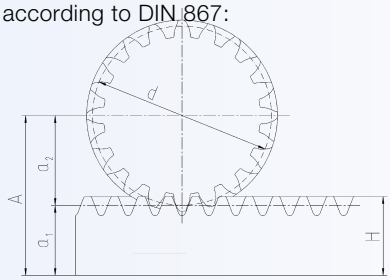

$$A = a_1 + a_2$$

with

$$a_1 = \frac{d}{2} + x \cdot m_n$$

and

$$a_2 = H - m_n$$

We would be happy to advise you on how to determine the axle distance between the pinion and gear ring.

Max. feed speed v_{2Max}

The max. feed speed of the rack and pinion system v_{2Max} [m/min] is calculated using the maximum output rpm of the gearbox n_{1Max} [rpm] (see gearbox catalog), the gearbox ratio i [–] and the pitch circle diameter of the output pinion d [m]:

$$v_{2Max} = \pi \cdot \frac{n_{1Max}}{i} \cdot d$$

Bearing forces

The tooth force components and bearing reactions are calculated at the mesh point of the rack and pinion as follows:

· Tangential and feed force $F_{2t} = \frac{T_2}{d/2}$

· Axial force $F2^a = F2t \cdot \tan \beta$

· Radial force component $\frac{F_{2t}}{\cos \beta} \cdot \tan \alpha$

The radial force on the gearbox is calculated using tangential force F_{2t} and radial force component F_{2q}: $F_{2r} = \sqrt{F_{2q}^2 + F_{2t}^2}$

The following approximately applies for toothings with standard basic rack tooth profile according to DIN 867: $F_{2r} \approx \frac{1.064}{\cos \beta} \cdot F_{2t}$

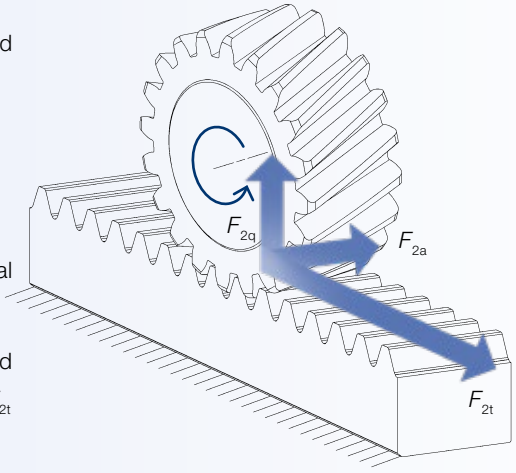

Design for X

The rack and pinion system can be optimized for different properties by varying the pinion diameter. Preferred systems of WITTENSTEIN alpha always represent the perfect compromise between transmittable feed force, linear system rigidity and attainable speed. The bearing in a cantilever manner and standardized interfaces on a wide selection of existing output pinions allow WITTENSTEIN alpha to react flexibly to the requirements in the respective application.

Design for Speed	Design for Feed Force	Design for Rigidity
		
Speed	**Feed Force**	**Rigidity**
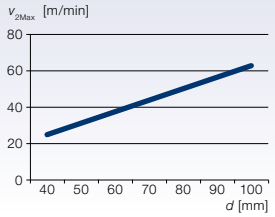	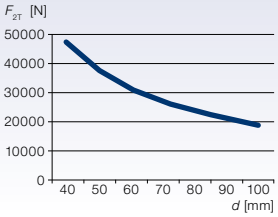	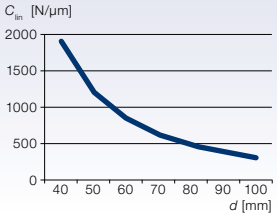

Linear system rigidity C_{lin}

The linear system rigidity of a rack and pinion system is essentially comprised of the following influencing factors:

Torsional rigidity, $C_{t21,\,lin}$ | Tilting rigidity, $C_{2K,\,lin}$ | Engaging spring rigidity, C_γ

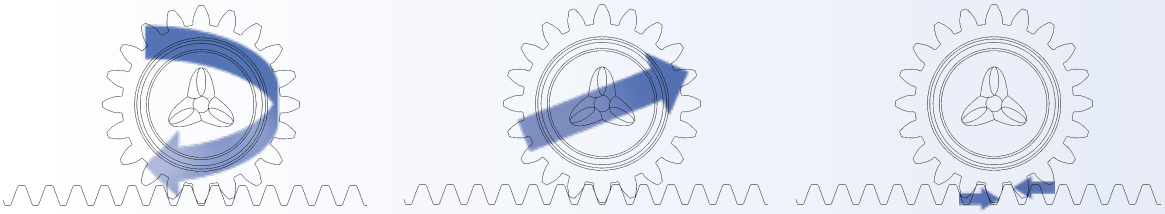

The system rigidity is calculated by adding the reciprocals of all individual rigidity values:

$$\frac{1}{C_{lin}} = \frac{1}{C_{t21,lin}} + \frac{1}{C_{2K,lin,t}} + \frac{1}{C_{2K,lin,r}} + \frac{1}{C_\gamma}$$

Rigidity is usually measured at relatively high loads to exclude any influence from friction and backlash.

Apart from the actual drive components, the overall system rigidity is essentially influenced by the mounting base for the components on the machine as well as the layout and size of the bearings (linear guides):

It is recommended that the mounting base is designed with thick, rigid geometries in order to transfer the extreme rigidity of the rack and pinion system all the way into the tooth mesh. Rigidity of the connection design and linear guides can be considered (perpendicular to the pitch line of the rack) by the rigidity components C_x (in feed direction) and C_y. The linear system rigidity is then:

$$\frac{1}{C_{lin}} = \frac{1}{C_{t21,lin}} + \frac{1}{C_{2K,lin,t}} + \frac{1}{C_{2K,lin,r}} + \frac{1}{C_\gamma} + \frac{1}{C_x} + \frac{1}{C_y}$$

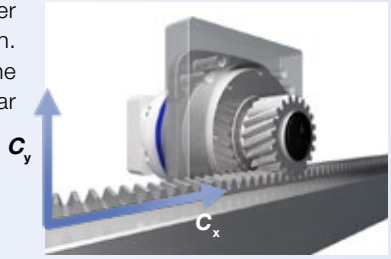

Torsional rigidity C_{T21}

Torsional rigidity C_{T21} [Nm / arcmin] is defined as the quotient of applied torque [Nm] and resulting torsion angle ϕ [arcmin] ($C_{T21} = \Delta T / \Delta\phi$). It consequently shows the torque required to turn the gearbox output shaft with pinion body by one angular minute.

In order to calculate the linear rigidity of the rack and pinion system, the torsional rigidity [Nm / arcmin] must be converted to its linear component [N / µm]:

$$C_{T21,lin} = C_{T21} \cdot \frac{360 \cdot 60\ \text{arcmin}}{0.5 \cdot \pi \cdot d^2} \qquad d \text{ in mm}$$

Feed force

The feed force is a configuration characteristic for WITTENSTEIN alpha racks and pinions. This includes the load-bearing capacity of the toothing and the interface between pinion and gearbox or between rack and the mounting base inside the machine.

Pinion/gearbox interface: The load-bearing capacity of the interface of the available pinion types varies due to the different hub/shaft or flange connections.

Toothing: The load-bearing capacity of the toothing is generally influenced by the tooth shape, the geometrical accuracy as well as the material and heat treatment (see case hardening).

Rack/mounting base interface: WITTENSTEIN alpha offers a variety of bolt patterns with different load-bearing capacities due to a variation in the number of bores and distance between the bores (see screw connection).

Besides the parameters of pinion and rack, the transferable torques and tilting moments of the gearbox have also been taken into account in the admissible feed forces of the system.

Tilting rigidity C_{2K}

The tilting rigidity [Nm / arcmin] C_{2K} of the gearbox in the rack and pinion system consists of the bending rigidity of the output or pinion shaft and the rigidity of the output bearing. It is defined as the quotient of tilting moment M_{2K} [Nm] and tilting angle ϕ [arcmin] ($C_{2K} = M_{2K} / \phi$). Tangential (in feed direction) and radial (perpendicular to the pitch line of the rack) tilting rigidity components [N / µm] can be used to calculate the total linear rigidity of the rack and pinion system.

The following simplified calculation model has been prepared to convert the tangential and radial tilting rigidity component analog to the tilting torque for gearboxes:

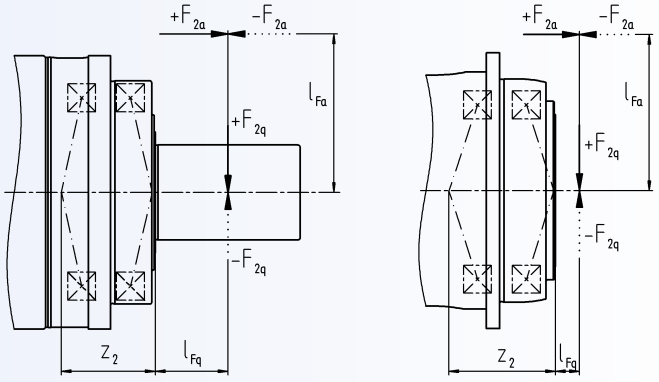

$$C_{2K,lin,t} = \frac{C_{2K} \cdot 60 \cdot 180}{\left(z_2 + l_{Fq}\right)^2 \cdot \pi}$$

$$C_{2K,lin,r} = \frac{C_{2K} \cdot 60 \cdot 180}{\pi \cdot \left(\left(z_2 + l_{Fq}\right) \cdot \tan^2 \alpha\right) \cdot \left(\left(z_2 + l_{Fq}\right) + \frac{\tan \beta}{\tan \alpha} \cdot \frac{d}{2}\right)}$$

C_{2K}... tilting rigidity of the gearbox in Nm/arcmin
l_{Fq} and z_2... lever arms for tilting torque calculation in mm
(l_{Fq} relates to application point in center of pinion)
α... normal pressure angle in °
β... helix angle in °

d, l_{Fq} and z_2 in mm

Mesh spring rigidity C_γ

The gears of the rack and pinion deform under load. The deformations are variable and change depending on the mesh position. C_γ [N / µm] can be assumed as a temporal average for WITTENSTEIN alpha rack and pinion systems with good approximation.

$$C_\gamma = 20 \frac{N}{\mu m \cdot mm} \cdot B$$

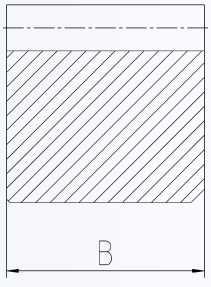

Dynamic rigidity

Modern servo controls make it possible to measure the natural frequency of systems. Taking the single mass oscillator model into consideration, the resulting rigidity can be calculated based on this natural frequency and the inertia of the application.
The measured dynamic rigidity is usually different from the total linear system rigidity calculated using the static measurements for individual components because:

- all system components in the power train (drive and machine components) including intermediate interfaces are taken into consideration
- the measurement is usually made at an operating point with small loads, unlike static rigidity measurements

Natural frequency f_E

The natural frequency f_E of the rack and pinion system is a characteristic variable relating to the dynamic behavior of the machine. The natural frequency is calculated using the linear system rigidity C_{lin} of the rack and pinion system and the moving mass m:

$$f_E = \frac{1}{2 \cdot \pi} \cdot \sqrt{\frac{C_{lin}}{m}}$$

A simplified model of a single mass oscillator forms the basis of this calculation. This simplification has proven to be suitable and it allows the effective comparisons between different applications.

Mesh frequency f_z

The mesh frequency f_z [Hz] may cause vibration problems in an application, especially if the excitation frequency corresponds to a natural frequency of the application.

The mesh frequency for planetary gearboxes of WITTENSTEIN alpha can be calculated using the formula $f_z = 1.8 \cdot n_2$ f_z in Hz, n_2 in rpm

On planetary gearboxes from WITTENSTEIN alpha, it is independent of the ratio (exception: gearboxes with ratio i = 8).

The mesh frequency of the rack and pinion tooth mesh is calculated using the formula $f_z = \frac{n_2}{60} \cdot z$ f_z in Hz, n_2 in rpm

Emergency stop feed force F_{2Not}

The emergency stop feed force F_{2Not} is the maximum permitted load for the rack and pinion system. It can be reached a max. of 1000 times during the service life of the system and must never be exceeded.

Depending on the configuration of the rack and pinion system, the emergency stop feed force is limited by different system components or system variables. The emergency stop torque T_{2Not} specified in the gearbox data must not be applied to the rack and pinion system if the limit value of other properties such as the permitted tilting torque of the gearbox would be exceeded.

Smooth operation

Smooth operation is a configuration characteristic for pinions and racks manufactured by WITTENSTEIN alpha. It describes the properties of the toothing related to operating noise and the occurrence of dynamic additional forces. Smooth operation is influenced primarily by periodic changes in the tooth spring rigidity (it fluctuates more on straight toothing than helical toothing), the toothing quality, profile and flank corrections as well as the surfaces of the tooth flanks.

Positioning accuracy (geometric)

Positioning accuracy is a configuration characteristic for pinions and racks manufactured by WITTENSTEIN alpha. It essentially represents the geometric deviations of the toothing components.

The geometric positioning accuracy of the overall system is mainly influenced by the following deviations:
- Gearbox torsional backlash
- Gearbox synchronous run
- Total cumulative pitch deviation or concentricity deviation of the pinion
- Total cumulative pitch deviation of the rack
- Measurement over pins deviation of the rack

Load-dependent deviations are added to the geometric deviations (see linear system rigidity).

Basic Line gearbox overview



Product type		CP	CPS	CPK	CPSK	CVH	CVS
Version		MF	MF	MF	MF	MF / MT	MF / MT
Ratio [c]	min. *i* =	3	3	3	3	7	7
	max. *i* =	100	100	100	100	40	40
Max. torsional backlash [arcmin] [c]	Standard	≤ 12	≤ 12	≤ 15	≤ 15	≤ 15	≤ 15
	Reduced	–	–	–	–	–	–
Output type							
Smooth shaft		x	x	x	x	–	x
Shaft with key [d]		x	x	x	x	–	x
Splined shaft (DIN 5480)		–	–	–	–	–	–
Blind hollow shaft		–	–	–	–	–	–
Hollow shaft interface		–	–	–	–	x	–
Keyed hollow shaft		–	–	–	–	x	–
Flanged hollow shaft		–	–	–	–	–	–
Flange		–	–	–	–	–	–
System output		–	–	–	–	–	–
Output on both sides		–	–	–	–	x	x
Input type							
Motor-mounted		x	x	x	x	x	x
Self-contained version [b]		–	–	–	–	–	–
Characteristic							
Flange with slotted holes		–	–	–	–	–	–
ATEX [a]		–	–	–	–	–	–
Food-grade lubrication [a] [b]		x	x	x	x	x	x
Corrosion resistant [a] [b]		–	–	–	–	–	–
Optimized mass inertia [a]		–	–	–	–	–	–
System solutions							
Linear system (rack/pinion)		–	–	–	–	–	–
Servo actuator		–	–	–	–	–	–
Accessories (please refer to the product pages for further options)							
Coupling		x	x	x	x	–	x
Shrink disc		–	–	–	–	x	–

[a] Power reduction: technical data available on request
[b] Please contact WITTENSTEIN alpha
[c] In relation to reference sizes
[d] Power reduction: Please use our sizing software cymex® for a detailed sizing – www.wittenstein-cymex.com

Value Line gearbox overview



Product type		NP	NPL	NPS	NPT	NPR	NTP	NPK	NPLK	NPSK	NPTK	NPRK	NVH	NVS	HDV
Version		MF/MA	MF/MA	MF/MA	MF/MA	MF/MA	MQ	MF	MF	MF	MF	MF	MF	MF	MF/MT
Ratio [c]	min. *i* =	3	3	3	3	3	4	3	3	3	3	3	4	4	4
	max. *i* =	100	100	100	100	100	100	100	100	100	100	100	400	400	400
Max. torsional backlash [arcmin] [c]	Standard	≤ 8	≤ 8	≤ 8	≤ 8	≤ 8	≤ 5	≤ 11	≤ 11	≤ 11	≤ 11	≤ 11	≤ 6	≤ 6	≤ 10
	Reduced	–	–	–	–	–	–	–	–	–	–	–	–	–	–
Output type															
Smooth shaft		x	x	x	–	x	–	x	x	x	–	x	–	x	x
Shaft with key [d]		x	x	x	–	x	–	x	x	x	–	x	–	x	x
Splined shaft (DIN 5480)		–	x	x	–	x	–	–	x	x	–	x	–	–	–
Blind hollow shaft		–	–	–	–	–	–	–	–	–	–	–	–	–	–
Hollow shaft interface		–	–	–	–	–	–	–	–	–	–	–	x	–	–
Keyed hollow shaft		–	–	–	–	–	–	–	–	–	–	–	x	–	–
Flanged hollow shaft		–	–	–	–	–	–	–	–	–	–	–	–	–	–
Flange		–	–	–	x	–	x	–	–	–	x	–	–	–	–
System output		–	–	–	–	–	–	–	–	–	–	–	–	–	–
Output on both sides		–	–	–	–	–	–	–	–	–	–	–	x	x	–
Input type															
Motor-mounted		x	x	x	x	x	x	x	x	x	x	x	x	x	x
Self-contained version [b]		–	–	–	–	–	–	–	–	–	–	–	–	–	–
Characteristic															
Flange with slotted holes		–	–	–	–	x	–	–	–	–	–	x	–	–	–
ATEX [a]		–	–	–	–	–	–	–	–	–	–	–	–	–	–
Food-grade lubrication [a] [b]		x	x	x	x	x	x	x	x	x	x	x	x	x	x
Corrosion resistant [a] [b]		–	–	–	–	–	–	–	–	–	–	–	x	x	x
Optimized mass inertia [a]		–	–	–	–	–	–	–	–	–	–	–	–	–	–
System solutions															
Linear system (rack/pinion)		x	x	x	–	x	–	x	x	x	–	x	–	x	–
Servo actuator		–	–	–	–	–	–	–	–	–	–	–	–	–	x
Accessories (please refer to the product pages for further options)															
Coupling		x	x	x	x	x	x	x	x	x	–	x	–	x	–
Shrink disc		–	–	–	–	–	–	–	–	–	–	–	x	–	–

[a] Power reduction: technical data available on request
[b] Please contact WITTENSTEIN alpha
[c] In relation to reference sizes
[d] Power reduction: Please use our sizing software cymex® for a detailed sizing – www.wittenstein-cymex.com

Advanced Line gearbox overview



Product type		SP+	SP+ HIGH SPEED	SP+ HIGH SPEED friction optimized	TP+	TP+ HIGH TORQUE	HG+	SK+	SPK+
Version		MF	MC	MC-L	MF	MA	MF	MF	MF
Ratio [c]	min. *i* =	3	3	3	4	22	3	3	12
	max. *i* =	100	100	10	100	302.5	100	100	10000
Max. torsional backlash [arcmin] [c]	Standard	≤ 3	≤ 4	≤ 4	≤ 3	≤ 1	≤ 4	≤ 4	≤ 4
	Reduced	≤ 1	≤ 2	≤ 2	≤ 1	–	–	–	≤ 2
Output type									
Smooth shaft		x	x	x	–	–	–	x	x
Shaft with key [d]		x	x	x	–	–	–	x	x
Splined shaft (DIN 5480)		x	x	x	–	–	–	x	x
Blind hollow shaft		x	x	x	–	–	–	–	x
Hollow shaft interface		–	–	–	–	–	x	–	–
Keyed hollow shaft		–	–	–	–	–	–	–	–
Flanged hollow shaft		–	–	–	–	–	–	–	–
Flange		–	–	–	x	x	–	–	–
System output		–	–	–	x	x	–	–	–
Output on both sides		–	–	–	–	–	x	x	x
Input type									
Motor-mounted		x	x	x	x	x	x	x	x
Self-contained version [b]		x	–	–	x	–	–	–	–
Characteristic									
Flange with slotted holes		x	–	–	–	–	–	–	–
ATEX [a]		x	x	–	–	–	x	x	–
Food-grade lubrication [a] [b]		x	x	x	x	x	x	x	x
Corrosion resistant [a] [b]		x	x	x	x	x	x	x	x
Optimized mass inertia [a]		x	x	x	x	x	–	–	–
System solutions									
Linear system (rack/pinion)		x	x	–	x	x	–	x	x
Servo actuator		x	–	–	x	x	–	–	–
Accessories (please refer to the product pages for further options)									
Coupling		x	x	x	x	x	–	x	x
Shrink disc		x	x	x	–	–	x	–	x

[a] Power reduction: technical data available on request
[b] Please contact WITTENSTEIN alpha
[c] In relation to reference sizes
[d] Power reduction: Please use our sizing software cymex® for a detailed sizing – www.wittenstein-cymex.com



TK+	TPK+	TPK+ HIGH TORQUE	SC+	SPC+	TPC+	VH+	VS+	VT+	DP+	HDP+
MF	MF	MA	MF	MF	MF	MF	MF	MF	MF / MA	MA
3	12	66	1	4	4	4	4	4	16	22
100	10000	5500	2	20	20	400	400	400	55	55
≤ 4	≤ 4	≤ 1.3	≤ 4	≤ 4	≤ 4	≤ 3	≤ 3	≤ 3	≤ 3	≤ 1
–	≤ 2	–	–	≤ 2	≤ 2	≤ 2	≤ 2	≤ 2	≤ 1	–
–	–	–	x	x	–	–	x	–	–	–
–	–	–	x	x	–	–	x	–	–	–
–	–	–	–	x	–	–	x	–	–	–
–	–	–	–	x	–	–	–	–	–	–
–	–	–	–	–	–	x	–	–	–	–
–	–	–	–	–	–	x	–	–	–	–
x	–	–	–	–	–	–	–	x	–	–
–	x	x	–	–	x	–	–	–	x	x
–	x	x	–	–	x	–	–	–	–	–
x	x	x	–	–	–	x	x	–	–	–
x	x	x	x	x	x	x	x	x	x	x
–	–	–	–	–	–	–	–	–	–	–
–	–	–	–	–	–	–	–	–	–	–
x	–	–	–	–	–	–	–	–	–	–
x	x	x	x	x	x	x	x	x	x	x
x	x	x	–	–	–	x	x	x	x	x
–	–	–	–	–	–	–	–	–	x	x
x	x	x	x	x	x	–	x	x	–	–
–	–	–	–	–	–	–	–	–	–	–
x	x	x	x	x	x	–	x	x	–	–
–	–	–	–	x	–	x	–	–	–	–

Premium Line gearbox overview



Product type		XP+	XP+ HIGH TORQUE	XP+ HIGH SPEED	RP+	RP+ HIGH TORQUE	XPK+	RPK+	XPC+	RPC+
Version		MF	MA	MC	MF	MA	MF	MA	MF	MA
Ratio [c]	min. i =	3	5.5	3	4	5.5	12	48	4	22
	max. i =	100	55	100	10	220	1000	5500	20	55
Max. torsional backlash [arcmin] [c]	Standard	≤ 3	≤ 1	≤ 4	≤ 3	≤ 1	≤ 4	≤ 1.3	≤ 4	≤ 1.3
	Reduced	≤ 1	–	≤ 2	≤ 1	–	≤ 2	–	≤ 2	–
Output shape										
Smooth shaft		x	x	x	–	–	x	–	x	–
Shaft with key [d]		x	–	x	–	–	x	–	x	–
Splined shaft (DIN 5480)		x	x	x	–	–	x	–	x	–
Blind hollow shaft		x	x	x	–	–	x	–	x	–
Hollow shaft interface		–	–	–	–	–	–	–	–	–
Keyed hollow shaft		–	–	–	–	–	–	–	–	–
Flanged hollow shaft		–	–	–	–	–	–	–	–	–
Flange		–	–	–	x	x	–	x	–	x
System output		x	x	x	x	x	x	x	x	x
Output on both sides		–	–	–	–	–	–	–	–	–
Input type										
Motor-mounted		x	x	x	x	x	x	x	x	x
Self-contained version [b]		x	–	–	–	–	–	–	–	–
Characteristic										
Flange with slotted holes		x	x	x	x	x	x	x	x	x
ATEX [a]		–	–	–	–	–	–	–	–	–
Food-grade lubrication [a] [b]		x	x	x	x	x	x	x	x	x
Corrosion resistant [a] [b]		–	–	–	–	–	–	–	–	–
Optimized mass inertia [a]		x	–	x	x	x	–	–	–	–
System solutions										
Linear system (rack / pinion)		x	x	x	x	x	x	x	x	x
Servo actuator		x	–	–	x	x	–	–	–	–
Accessories (please refer to the product pages for further options)										
Coupling		x	x	x	–	–	x	–	x	–
Shrink disc		x	x	x	–	–	x	–	x	–

[a] Power reduction: technical data available on request
[b] Please contact WITTENSTEIN alpha
[c] In relation to reference sizes
[d] Power reduction: Please use our sizing software cymex® for a detailed sizing – www.wittenstein-cymex.com

Servo actuator overview



Product type		PBG	PAG	PHG	RPM+	TPM+ DYNAMIC	TPM+ HIGH TORQUE	TPM+ POWER	AVF
Version		Standard	Standard	Standard	Customer specific	Standard	Standard	Standard	Standard
Ratio [c]	min. i =	16	16	16	22	16	22	4	10
	max. i =	100	100	100	220	91	220	100	25
Max. torsional backlash [c] [arcmin]	Standard	≤ 5	≤ 3	≤ 4	≤ 1	≤ 3	≤ 1	≤ 3	≤ 10
	Reduced	≤ 3	≤ 1	≤ 2	–	≤ 1	≤ 1	≤ 1	–
Output shape									
Smooth shaft		x	–	x	–	–	–	–	x
Shaft with key [d]		x	–	x	–	–	–	–	x
Splined shaft (DIN 5480)		x	–	x	–	–	–	–	–
Blind hollow shaft		–	–	–	–	–	–	–	–
Hollow shaft interface		–	–	–	–	–	–	–	–
Keyed hollow shaft		–	–	–	–	–	–	–	–
Flanged hollow shaft		–	–	–	–	–	–	–	–
Flange		–	x	–	x	x	x	x	–
System output		–	x	x	x	x	x	x	–
Output on both sides		–	–	–	–	–	–	–	–
Input type									
Motor-mounted		–	–	–	–	–	–	–	–
Self-contained version		–	–	–	–	–	–	–	–
Characteristic									
Flange with slotted holes		–	–	x	x	–	–	–	–
ATEX [a]		–	–	–	–	–	–	–	–
Food-grade lubrication [a] [b]		x	x	x	x	x	x	x	x
Corrosion resistant [a] [b]		–	–	–	–	x	x	x	x
Optimized mass Inertia [a]		–	–	–	–	–	–	–	–
System solutions									
Linear system (rack / pinion)		x	x	x	x	x	x	x	–
Accessories (please refer to the product pages for further options)									
Coupling		x	x	–	–	x	x	x	–
Shrink disc		x	–	x	–	–	–	–	–
Power cable, signal cable, hyprid cable		x	x	x	x	x	x	x	x

[a] Power reduction: technical data available on request
[b] Please contact WITTENSTEIN alpha
[c] In relation to reference sizes
[d] Power reduction: Please use our sizing software cymex® for a detailed sizing – www.wittenstein-cymex.com

Overview of output interfaces

Rotative output interfaces



Smooth shaft
- Friction contact torque transmission via a clamp connection (e.g. in connection with a coupling)
- Simple connection of the gearbox to the application
- Consistently high transmittable torques even with highly cyclical changing loads
- Classic output interface for the shaft gears in the alpha Advanced Line and alpha Premium Line



Shaft with key
- Form fit torque transmission via the key in the cylindrical gearbox output[1]
- Easy to assemble and disassemble
- Cost-efficient solution for connecting the gearbox to the application
- Form fit locking of the shaft against slipping
- Danger of deflection with highly cyclical changing loads
- Not suitable for applications with high requirements in terms of repeatability
- Common output interface for the shaft gears in the alpha Basic Line and alpha Value Line



Splined shaft (DIN 5480)
- Form fit torque transmission via the tooth flanks of the output shaft
- Easy to assemble and disassemble
- Consistently high transmittable torques even with highly cyclical changing loads
- Requires little space
- Higher demands on design and production
- Used for connecting RMS pinions to the gearbox (see the alpha Linear Systems product catalog)



Flange output
- Friction contact torque transmission by screwing the application to the face of the gearbox output2
- Maximum torsional rigidity and torque transmission even with highly cyclical changing loads
- Simple and space-saving mounting base



Blind hollow shaft [4]
- Friction contact torque transmission via a hollow-shaft-like interface on the gearbox output for connecting the application to a shrink disc [3]
- Reduced space requirement due to elimination of connecting elements (e.g. couplings)



System output as the basis for RMW pinions (see alpha Linear Systems product catalog)

- Cohesive connection of the output flange with a pinion
- Highly flexible interface for connecting different pinion variants and geometries
- Maximum linear rigidity through the direct connection of pinions with a small reference pitch diameter
- Maximum safety and reliability
- Compact design



Flanged hollow shaft

- Friction contact torque transmission by screwing the application to the face of the gearbox output [2]
- Combination of flange output and hollow shaft for maximum use of space for feeding through e.g. cable harnesses or a shaft
- Maximum torsional rigidity and torque transmission even with highly cyclical changing loads
- Simple and space-saving mounting base



Hollow shaft interface [4]

- Friction contact torque transmission via cylindrical shoulder on the gearbox output for connecting the application to a shrink disc
- Hollow shaft for feeding through e.g. cable harnesses or a shaft
- Requires little space
- Complex mechanical calculation in the event of tilting moments or lateral forces



Keyed hollow shaft [4]

- Form fit torque transmission via the combination of the hollow shaft and a feather keyway [1]
- Hollow shaft for feeding through e.g. cable harnesses or a shaft
- Easy to assemble and disassemble
- Form fit safeguard of the shaft against slipping
- Requires little space
- Danger of deflection with highly cyclical changing loads
- Not suitable for applications with high requirements in terms of repeatability



Output on both sides

- Version of the gearbox with a second, rear output
- Use as input for an additional mounting base
- No reduction in the permitted speeds and torques on both output sides, except in gearboxes with additional planetary output stages (e.g. SPK+, TPK+); these gearboxes also have higher speeds at the rear output.
- Reduced absorption of axial and lateral forces on the rear output

[1] The cymex® 5 sizing software performs standard calculations in this regard. Assistance from WITTENSTEIN is possible if required.
[2] The reliability of the screws depends largely on the screws used, the screw tightening procedure, and the cleaning procedure for the screws during assembly. Recommendations in this regard are included in the operating manual.
[3] For radial loads, a case-by-case check by WITTENSTEIN is recommended.
[4] To prevent overdetermination of the system, a torque support is recommended.

Structural note – Rack interface

INIRA® pin bore

All racks are dimensionally identical and available in the INIRA® variant in the Advanced and Premium Linear Systems.

The INIRA® pin hole is manufactured in one set up together with threaded holes in the machine bed. The position can be determined using the adjacent tables.

Module [mm]	h_B [mm]	h_p [mm]	d_p [mm]
2	8	12	6H7
3	9	14	8H7
4	12	18	10H7
5	12	23	12H7
6	16	23	16H7

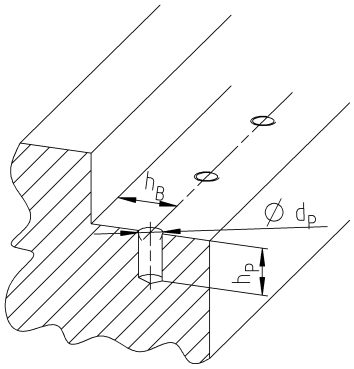

Design of the mounting base

The mounting precision and geometric tolerance of the mounting surfaces in the mounting base depend heavily on the application. Deviations in applications with demanding requirements in terms of positioning accuracy and smooth operation of the drive system should be minimal. Greater deviations are permitted if requirements are less demanding.

Refer to our "alpha rack and pinion system" operating manual for more detailed specifications regarding the mounting surfaces.

Mounting base requirements:

- There is a chamfer on the rack at the transition point between the mounting and rear surface. Recesses can be omitted from the mounting base as a result. The mounting base in the machine must be designed in a way that the milling edge does not collide with the chamfer on the rack (see illustration).
- The mounting base should be designed to be able to clamp the rack easily. This is achieved when the height of the stop surface is more than 50 % of the rack height and a suitable mating surface is available for clamping with a clamping device. If INIRA® is used, the mounting base can be designed much simpler because the clamping system is integrated in the rack.
- The threaded holes for the fastening screws must allow a sufficient screw-in depth, according to the material used for the mounting base. Refer to page 134 for more information on the screw-in depth.

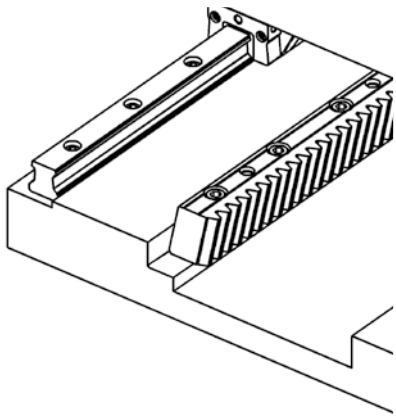

Refer to our operating manual for more information on designing the structure of the entire drive system. Alternatively, get in touch with us - we would be happy to advise you!

Racks – Feed force 4

Advanced INIRA® Premium INIRA®

Module [mm]	p_t [mm]	L [mm]	z [ ]	a [mm]	a_1 [mm]	B [mm]	d [mm]	d_1 [1)] [mm]	D [mm]	h [mm]	h_B [2)] [mm]	h_D [mm]	H [mm]	l [mm]	l_1 [mm]	L_1 [mm]
2.0	6.666	500	75	58.20	375.0	24	7	5.7	11	22.0	8	7.0	24	27.00	62.5	8.5
3.0	10.000	500	50	57.40	375.0	29	10	7.7	15	26.0	9	9.0	29	26.10	62.5	10.3
4.0	13.333	493	37	55.58	375.0	39	12	9.7	18	35.0	12	11.0	39	24.33	62.5	13.8
5.0	16.666	500	30	53.78	375.0	49	14	11.7	20	34.0	12	13.0	39	22.53	62.5	17.4
6.0	20.000	500	25	52.00	375.0	59	18	15.7	26	43.0	16	17.0	49	20.79	62.5	20.9

[1)] Recommended tolerances for the pin bore 6H7/ 8H7/ 10H7/ 12H7/ 16H7/ 20H7
[2)] With INIRA® pinning, note machine bed sketch
p_t = Transverse pitch
z = Number of teeth

= Optional = Optional

Racks – Feed force 1 / 2 / 3

Value

Advanced INIRA® Premium INIRA®

Module [mm]	p_t [mm]	L [mm]	z [ ]	a [mm]	a_1 [mm]	B [mm]	d [mm]	d_1 [1)] [mm]	D [mm]	h [mm]	h_B [2)] [mm]	h_D [mm]	H [mm]	l [mm]	l_1 [mm]	L_1 [mm]
1.5	5.000	500	100	31.70	436.6	19	6	5.7	10	17.5	7	5.5	19	62.50	125.0	6.7
2.0	6.666	500	75	31.70	436.6	24	7	5.7	11	22.0	8	7.0	24	62.50	125.0	8.5
3.0	10.000	500	50	35.00	430.0	29	10	7.7	15	26.0	9	9.0	29	62.50	125.0	10.3
4.0	13.333	493	37	33.30	433.0	39	8 / 10 [4)]	7.7 / 9.7 [4)]	15	35.0	12	9.0	39	62.50	125.0	13.8
5.0	16.666	500	30	37.50	425.0	49	14	11.7	20	34.0	12	13.0	39	62.50	125.0	17.4
6.0	20.000	500	25	37.50	425.0	59	18	15.7	26	43.0	16	17.0	49	62.50	125.0	20.9
8.0[3)]	26.666	480	18	120.0	240.0	79	23	19.7	34	71.0	25	21.0	79	60.00	120.0	28.0

[1)] Recommended tolerances for the pin bore 6H7/ 8H7/ 10H7/ 12H7/ 16H7/ 20H7
[2)] With INIRA® pinning, note machine bed sketch
[3)] Not available as INIRA®
[4)] Diameter is defined by the rack execution. Please observe the dimension sheet.
p_t = Transverse pitch
z = Number of teeth

= Optional = Optional

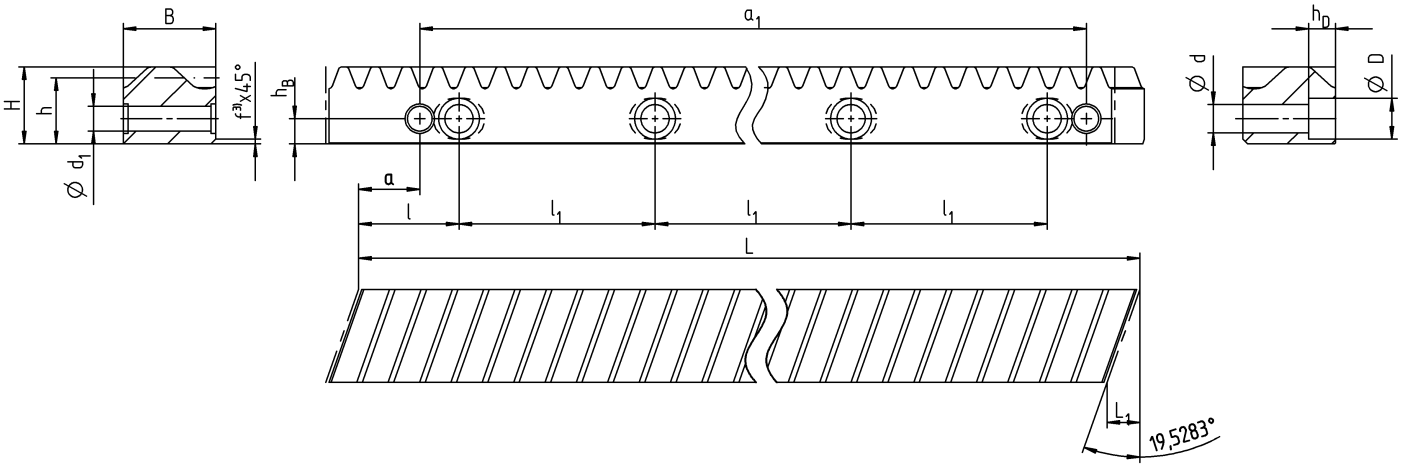

Racks – Feed force 4

Advanced INIRA® / Premium INIRA®

Module [mm]	p_t [mm]	L [mm]	z [ ]	a [mm]	a_1 [mm]	B [mm]	d [mm]	d_1 [1)] [mm]	D [mm]	h [mm]	h_B [2)] [mm]	h_D [mm]	H [mm]	l [mm]	l_1 [mm]	L_1 [mm]
2.0	6.666	1000	150	58.22	875.0	24	7	5.7	11	22.0	8	7.0	24	26.97	62.5	8.5
3.0	10.000	1000	100	57.33	875.0	29	10	7.7	15	26.0	9	9.0	29	26.08	62.5	10.3
4.0	13.333	1000	75	55.56	875.0	39	12	9.7	18	35.0	12	11.0	39	24.31	62.5	13.8
5.0	16.666	1000	60	53.78	875.0	49	14	11.7	20	34.0	12	13.0	39	22.53	62.5	17.4
6.0	20.000	1000	50	52.01	875.0	59	18	15.7	26	43.0	16	17.0	49	20.76	62.5	20.9
8.0[3)]	26.666	960	36	49.96	832.0	79	23	19.7	34	71.0	25	21.0	79	17.96	64.0	28.0

[1)] Recommended tolerances for the pin bore 6H7/ 8H7/ 10H7/ 12H7/ 16H7/ 20H7
[2)] With INIRA® pinning, note machine bed sketch
[3)] Not available as INIRA®
p_t = Transverse pitch
z = Number of teeth

= Optional = Optional

Racks – Feed force 1 / 2 / 3

Value
Advanced INIRA® / Premium INIRA®

Module [mm]	p_t [mm]	L [mm]	z [ ]	a [mm]	a_1 [mm]	B [mm]	d [mm]	d_1 [1)] [mm]	D [mm]	h [mm]	h_B [2)] [mm]	h_D [mm]	H [mm]	l [mm]	l_1 [mm]	L_1 [mm]
1.5 [5)]	5.000	1000	200	31.70	936.6	19	6	5.7	10	17.5	7	5.5	19	62.50	125.0	6.7
2.0 [5)]	6.666	1000	150	31.70	936.6	24	7	5.7	11	22.0	8	7.0	24	62.50	125.0	8.5
3.0	10.000	1000	100	35.00	930.0	29	10	7.7	15	26.0	9	9.0	29	62.50	125.0	10.3
4.0	13.333	1000	75	33.30	933.4	39	8 / 10 [4)]	7.7 / 9.7 [4)]	15	35.0	12	9.0	39	62.50	125.0	13.8
5.0	16.666	1000	60	37.50	925.0	49	14	11.7	20	34.0	12	13.0	39	62.50	125.0	17.4
6.0	20.000	1000	50	37.50	925.0	59	18	15.7	26	43.0	16	17.0	49	62.50	125.0	20.9
8.0 [3)]	26.666	960	36	119.92	720.0	79	23	19.7	34	71.0	25	21.0	79	60.00	120.0	28.0

[1)] Recommended tolerances for the pin bore 6H7/ 8H7/ 10H7/ 12H7/ 16H7/ 20H7
[2)] With INIRA® pinning, note machine bed sketch
[3)] Not available as INIRA®
[4)] Diameter is defined by the rack execution. Please observe the dimension sheet.
[5)] also as 2000 mm variant in Value Segment
p_t = Transverse pitch
z = Number of teeth

= Optional = Optional

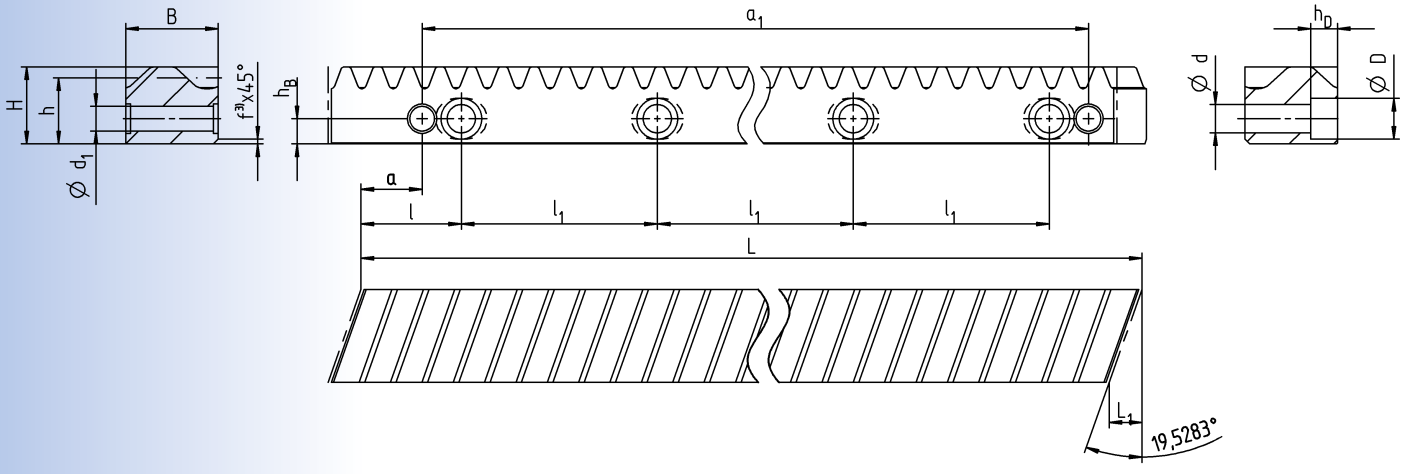

Racks – Feed force 1 / 2

	Module [mm]	p_t [mm]	L [mm]	z [ ]	a [mm]	a_1 [mm]	B [mm]	d [mm]	d_1 [1)] [mm]	D [mm]	h [mm]	h_B [2)] [mm]	h_D [mm]	H [mm]	l [mm]	l_1 [mm]	L_1 [mm]
Value Advanced INIRA®	2.0	6.666	2000	300	31.70	1936.6	24	7	5.7	11	22.0	8	7.0	24	62.50	125.0	8.5
	3.0	10.000	2000	200	35.00	1930.0	29	10	7.7	15	26.0	9	9.0	29	62.50	125.0	10.3
	4.0 [3)]	13.333	2000	150	33.30	1933.4	39	8	7.7	15	35.0	12	9.0	39	62.50	125.0	13.8
	4.0	13.333	2000	150	33.30	1933.4	39	10	9.7	15	35.0	12	9.0	39	62.50	125.0	13.8

[1)] Recommended tolerances for the pin bore 6H7/ 8H7/ 10H7/ 12H7/ 16H7/ 20H7
[2)] With INIRA® pinning, note machine bed sketch
[3)] Not available as INIRA®
p_t = Transverse pitch
z = Number of teeth

= Optional

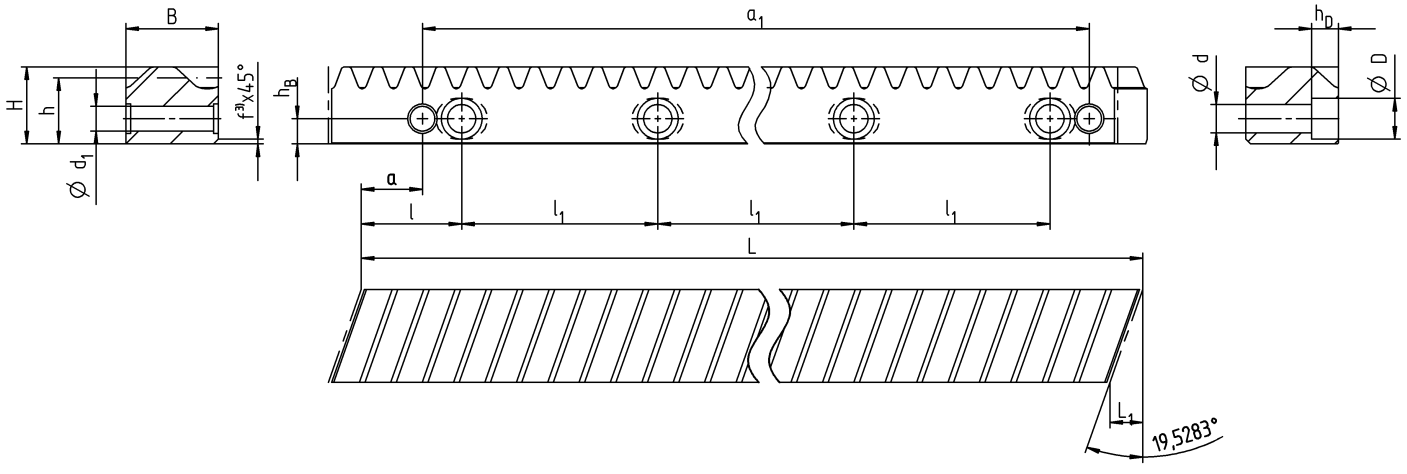

The WITTENSTEIN group – The company and its fields of business

WITTENSTEIN

With approximately 2,800 employees worldwide, the WITTENSTEIN group stands for innovation, precision and excellence in the world of mechatronic drive technology, both nationally and internationally. The group is active in six innovative fields of business. Furthermore, WITTENSTEIN group is represented by some 60 subsidiaries in around 40 countries in all important technology and sales markets worldwide.



Our fields of expertise

We provide know-how for a host of different sectors:

- Machine and plant construction
- Software development
- Aerospace
- Automotive & E-mobility
- Energy
- Oil & Gas Exploration and Production
- Medical technology
- Measurement and testing technology
- Nanotechnology
- Simulation

The WITTENSTEIN Group

WITTENSTEIN | alpha

WITTENSTEIN alpha GmbH
High-precision servo drives and linear systems



WITTENSTEIN | cyber motor

WITTENSTEIN cyber motor GmbH
Highly dynamic servo motors and drive electronics



WITTENSTEIN | galaxie

WITTENSTEIN galaxie GmbH
Superior gearboxes and drive systems



WITTENSTEIN | motion control

WITTENSTEIN motion control GmbH
Drive systems for the most extreme environmental requirements

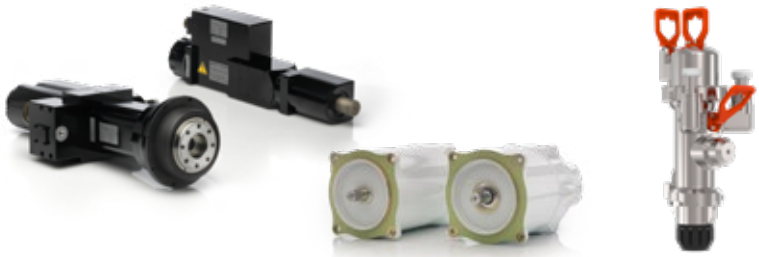

attocube
WITTENSTEIN group

attocube systems AG
Nanoprecision drive and measurement technology solutions



baramundi

baramundi software GmbH
Secure management of the IT infrastructure in offices and production



WITTENSTEIN – one with the future

WITTENSTEIN alpha

WITTENSTEIN Inc. · 1249 Humbracht Circle · Bartlett, IL 60103 · USA · Phone 1-630-540-5300

Subject to technical changes. alpha Linear Systems

WITTENSTEIN alpha – Intelligent drive systems

www.wittenstein-us.com

The entire world of drive technology – Catalogs available on request or online at www.wittenstein-us.com/catalogs

alpha Premium Line. Unique, individual solutions that offer unparalleled power density.

alpha Advanced Line. Maximum power density and outstanding positioning accuracy for complex applications.

alpha Basic Line & alpha Value Line. Reliable, flexible and economical solutions for a wide range of applications.

alpha Linear Systems. Precise, dynamic system solutions for every requirement.

alpha Mechatronic Systems. Energy-efficient, versatile and flexible mechatronic drive systems.

alpha Accessories. Optimally designed and adapted for gearboxes and actuators.